1A Bipolar Linear Regulator

General Description

The ETC1117 is the low dropout three-terminal regulators with fixed output 1.2V, 1.8V, 2.5V, 2.85V, 3.3V, 5V and an adjustable version, which can provide an output voltage from 1.25 to 12V with only two external resistors. The ETC1117 features dropout of 1.1V at 1A load current and very low standby current 2mA. ETC1117 offers thermal shut down function to assure the stability of chip and power system.

The ETC1117 is available in the SOT-223, SOT89-3 and TO-252 package.

Features

- Maximum Output Current Is 1.2A (TYP)
- Output Version Have ADJ, 1.8V, 3.3V, 5.0V Version
- Range of Operation Input Voltage up to 15V (MAX)
- Line Regulation Is 0.03%/V (TYP)
- Standby Current Is 2mA (TYP)
- Low Dropout Voltage Is 1.1V (TYP)@0.8A

Applications

- Power Management for Computer Mother
- Board, Graphic Card
- LCD Monitor and LCD TV
- Post Regulators for Switching Supplies

Device Information

ETC1117 VXX X

VXX Output Voltage		X Package		Packing Option	MSL
VXX	Output X.XV For Example, V33 Is 3.3V, Default Is Adjustable Version	Blank	SOT-223	Tape and Reel, 2.5K/Reel	3
		B1	SOT89-3	Tape and Reel, 1K/Reel	3
		O	TO252-2L	Tape and Reel, 2.5K/Reel	3

Device Information

Part No.	VOUT Type	Package
ETC1117	ADJ Output	SOT-223
ETC1117B1	ADJ Output	SOT89-3
ETC1117O	ADJ Output	TO252-2L
ETC1117VXX	X.XV Fixed Output	SOT-223
ETC1117VXXB1	X.XV Fixed Output	SOT89-3
ETC1117VXXO	X.XV Fixed Output	TO252-2L

Pin Configuration

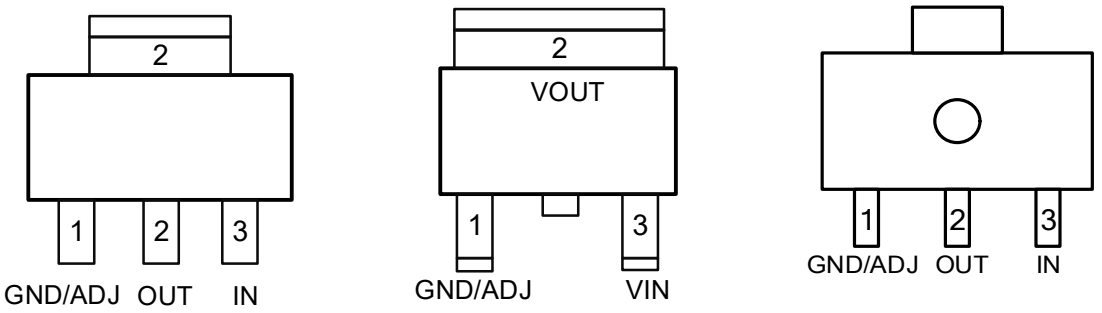

SOT-223 TO252-2L SOT89-3

Figure1. Top View

Pin Function

Pin	Name	Description
1	GND / ADJ	Ground Pin (Fixed Type) / ADJ Pin (ADJ Type)
2	OUT	Output Pin
3	IN	Input Pin

Block Diagram

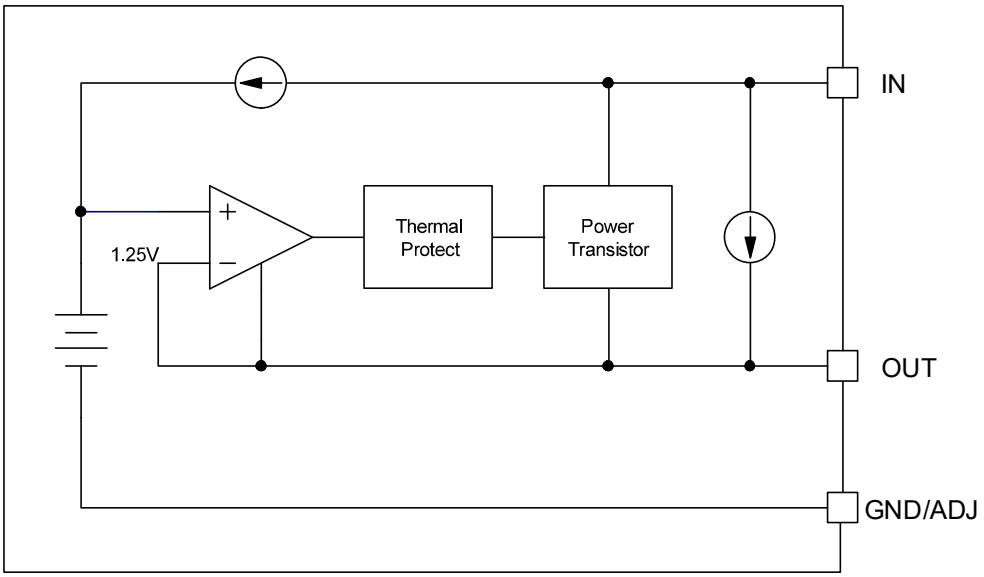

Figure2. Block Diagram

Functional Description

ETC1117 is a low dropout voltage, three terminal regulators. Its application circuit is very simple: the fixed version only needs two capacitors and the adjustable version only needs two resistors and two capacitors to work. It is composed of some modules including start-up circuit, bias circuit, band gap, thermal shutdown, power transistors and its driver circuit and so on.

The thermal shutdown modules can assure chip and its application system working safety when the junction temperature is larger than 125°C.

Absolute Maximum Ratings

Over operating free-air temperature range (unless otherwise noted)

Symbol	Parameter		Rating	Unit
V_{IN}	Input Voltage		-0.3 ~ 18	V
I_{OUT_MAX}	Maximum Output Current		1.2	A
T_{JMAX}	Maximum Operating Junction Temperature		150	°C
T_{STG}	Storage Temperature		-40 ~ 150	°C
P_D	Power Dissipation	SOT-223	1.25	W
		TO252-2L	2.0	
		SOT89-3	0.92	
θ_{JA}	Thermal Resistance	SOT-223	100	°C/W
		TO252-2L	62.5	
		SOT89-3	136	
θ_{JC}		SOT-223	20	°C/W
		TO252-2L	10	
		SOT89-3	14.7	

Recommended Operating Conditions

Symbol	Parameter	Rating	Unit
V_{IN} **(1)**	Input Voltage	-0.3 ~ 15	V
I_{OUT}	Maximum Output Current	1	A
T_J	Operating Junction Temperature	-40 ~ 125	°C

Notes1: The maximum input voltage should take into account the maximum power consumption ($P_{D(MAX)}$).

The calculation formula is as follows:

$$\mathbf{P_{D(MAX)} = (V_{IN(MAX)} - V_{OUT}) \times I_{OUT}}$$

The maximum power consumption of the SOT-223 is 1250mW.

$$\mathbf{V_{IN(MAX)} = 1250mW / I_{OUT} + V_{OUT}}$$

For example:

If V_{OUT} = 5.0V, I_{OUT} = 250mA, the maximum input voltage is $V_{IN(MAX)}$ = 1250mW / 250mA + 5.0 = 10.0V

Electrical Characteristics

T_J = 25°C, unless otherwise noted.

Symbol	Parameter	Conditions	Min	Typ	Max	Unit
V_{REF}	Reference Voltage	0 ≤ I_{OUT} ≤ 0.8A, V_{IN} = 3.25V, T_J = 25°C (Adjustable Version)	1.225	1.25	1.275	V
V_{OUT}	Output Voltage	0 ≤ I_{OUT} ≤ 0.8A, V_{IN} = V_{OUT} + 2V, T_J = 25°C 0mA ≤ I_{OUT} ≤ 800mA (Fixed Version)	-2		2	%
		V_{OUT} + 2V ≤ V_{IN} ≤ 12V, I_{OUT} = 10mA T_J = -40 ~ 125°C	-2		2	
ΔV_{OUT} / V_{IN}	Line Regulation	I_{OUT} = 10mA, 7.0V ≤ V_{IN} ≤ 12V		0.03	0.2	%/V
ΔV_{OUT} / I_{OUT}	Load Regulation	V_{IN} = V_{OUT} + 1.5V, V_{OUT} = 1.2V 10mA ≤ I_{OUT} ≤ 0.8A		2	25	mV
		V_{IN} = V_{OUT} + 1.5V, Adj Version 10mA ≤ I_{OUT} ≤ 0.8A		2	30	
		V_{IN} = V_{OUT} + 1.5V, V_{OUT} = 5.0V 10mA ≤ I_{OUT} ≤ 0.8A		5	30	
V_{Drop} (2)	Dropout Voltage	I_{OUT} = 100mA		1.0	1.2	V
		I_{OUT} = 500mA		1.05	1.25	V
		I_{OUT} = 800mA		1.1	1.3	V
I_Q	Quiescent Current	V_{IN} = 12V		2	5	mA
I_{LIMIT}	Max Limit Current	V_{IN} - V_{OUT} = 5V	1.2	1.4		A
PSRR (3)	Ripple Rejection	V_{IN} - V_{OUT} = 3V, V_{RIPPLE} = 1V_{PP}, f= 120Hz		65		dB
I_{ADJ}	Adjust Pin Current	V_{IN} = 5V, Adj Version, 10mA ≤ I_{OUT} ≤ 0.8A		55	120	μA
I_{Change}	I_{ADJ} Change	V_{IN} = 5V, Adj Version, 10mA ≤ I_{OUT} ≤ 0.8A		0.2	10	μA
$\Delta V/\Delta T/V_{OUT}$	Temperature Coefficient	-40°C ~ 125°C		±100		ppm/°C

Notes2: V_{DROP} FT test method: test the V_{OUT} voltage at V_{SET} + $V_{DROPMAX}$ with output current.

Notes3: Guaranteed by design and characterization. Not a FT item.

Typical Characteristics

(V_{OUT} = 3.3V, V_{IN} = V_{OUT} + 2V, I_{OUT} = 1mA, C_{IN} = 10μF, C_{OUT} = 22μF, unless otherwise noted. Typical values are at T_J = +25°C.)

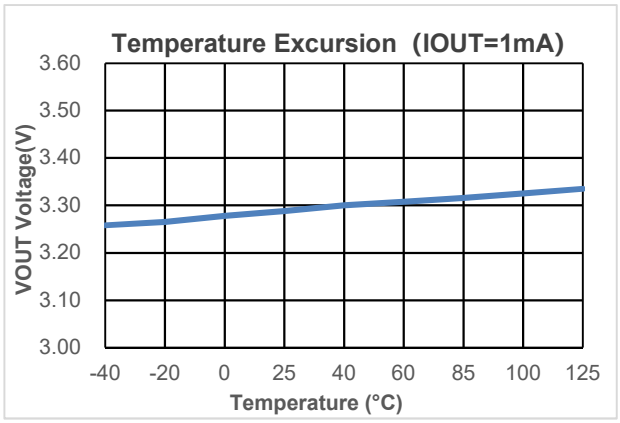

Output Voltage VS Temperature

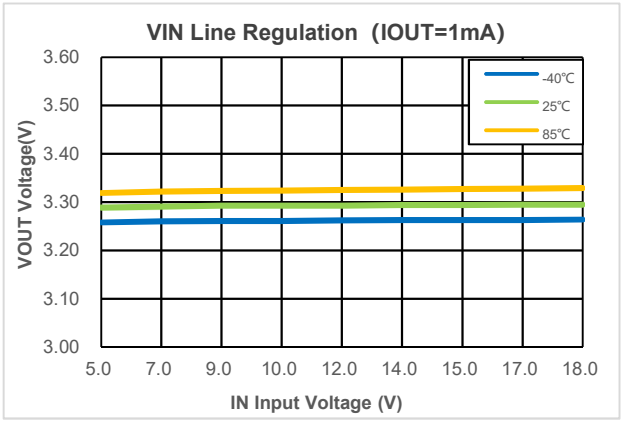

Output Voltage VS Input Voltage(IOUT = 1mA)

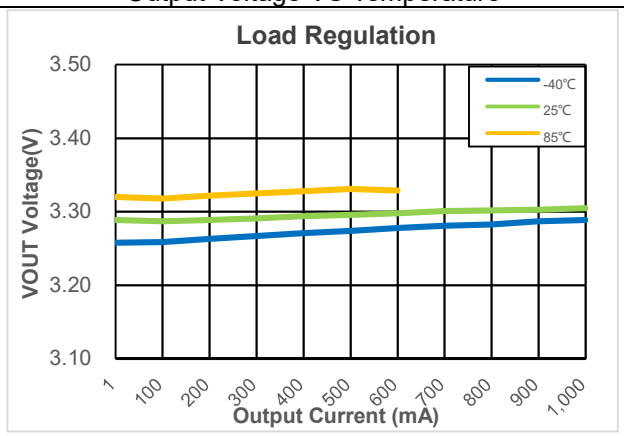

Output Voltage VS Output Current

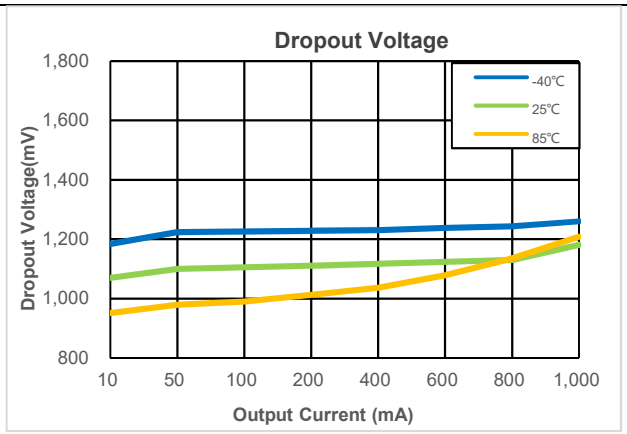

Dropout Voltage VS Output Current

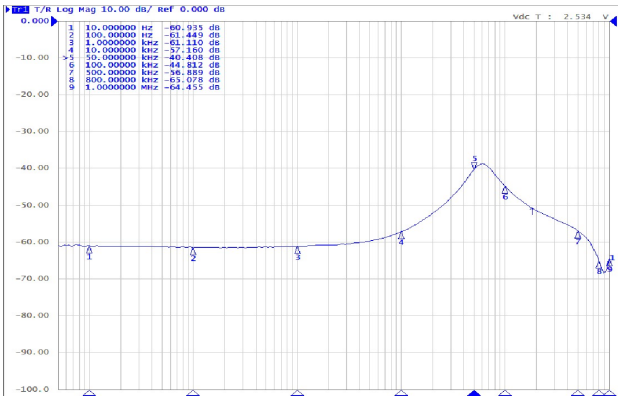

PSRR (I_{OUT} = 10mA)

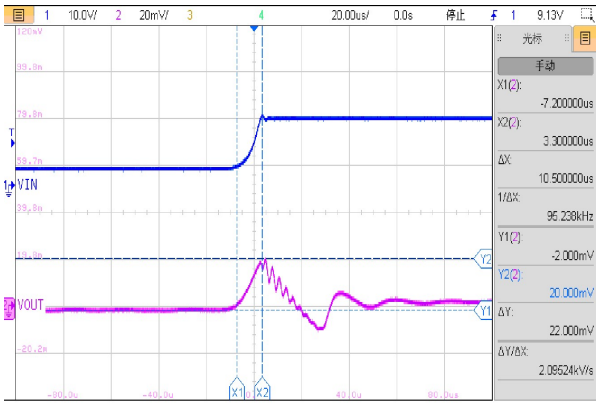

Line Transient Response

V_{IN} = 4.5V~15V, V_{OUT} = 3.3V, I_{OUT} = 1mA

Typical Characteristics (Continued)

(V_{OUT} = 3.3V, V_{IN} = V_{OUT} + 2V, I_{OUT} = 1mA, C_{IN} = 10μF, C_{OUT} = 22μF, unless otherwise noted. Typical values are at T_J = +25°C.)

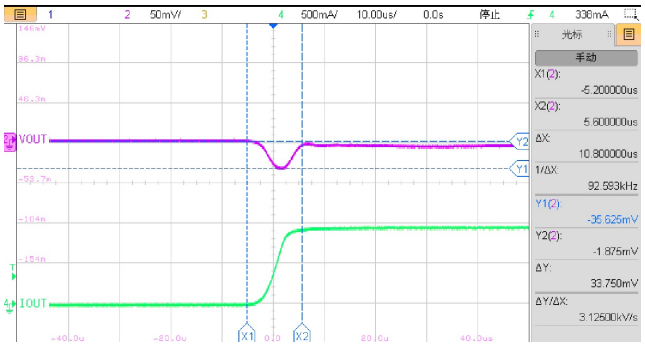

Load Transient Response

V_{IN} = 5.3V, V_{OUT} = 3.3V, I_{OUT} = 1mA~1000mA

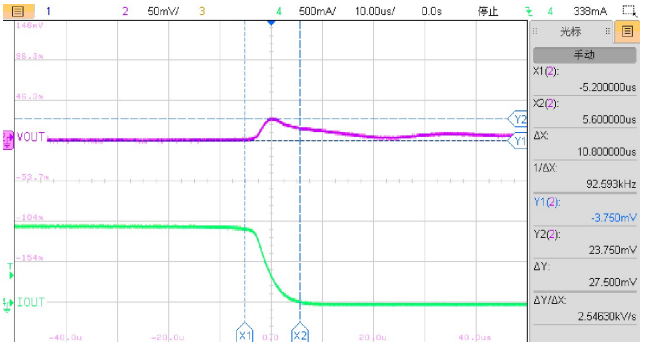

Load Transient Response

V_{IN} = 5.3V, V_{OUT} = 3.3V, I_{OUT} = 1000mA~1mA

Application Circuit

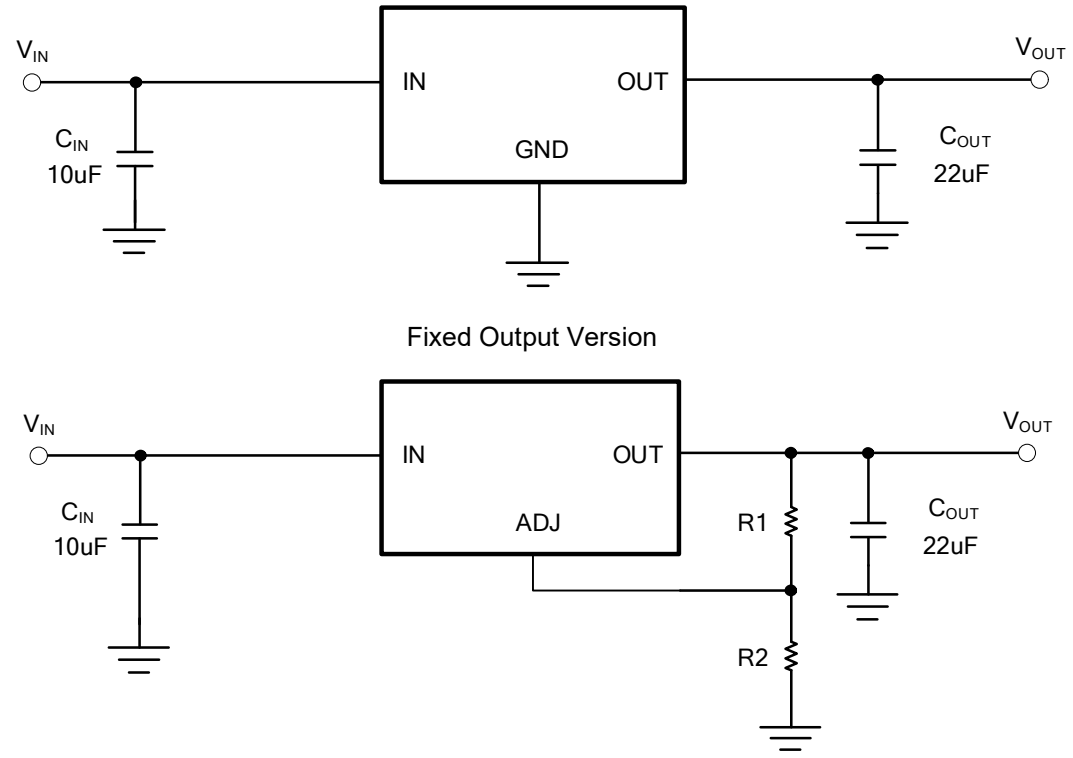

Figure3. Application Circuit

Notes4: The output voltage of adjustable version follows the equation:

$$V_{OUT} = V_{REF} \times (1 + R2 / R1) + I_{ADJ} \times R2$$

We can ignore I_{ADJ} because I_{ADJ} (about 50μA) is much less than the current of R1 (about 2 ~ 10mA).

1) To meet the minimum load current (> 10mA) requirement, R1 is recommended to be 125Ω or lower. As

ETC1117(ADJ Version) can keep itself stable at load current about 2mA, R1 is not allowed to be higher than 625Ω.

Using a bypass capacitor (C_{ADJ}) between the ADJ pin and ground can improve ripple rejection. This bypass capacitor prevents ripple from being amplified as the output voltage is increased. The impedance of C_{ADJ} should be less than R1 to prevent ripple from being amplified. As R1 is normally in the range of 100Ω~500Ω, the value of C_{ADJ} should satisfy this equation:

$$1 / (2\pi \times fripple \times C_{ADJ}) < R1$$

Package Dimension

SOT-223

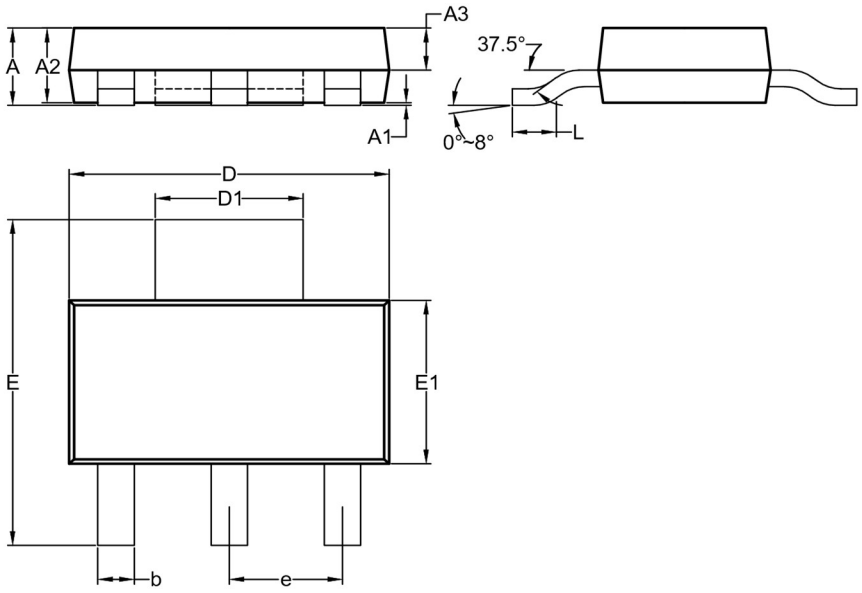

COMMON DIMENSIONS

(Unit: mm)

SYMBOL	MIN	NOM	MAX
A	1.5	1.65	1.8
A1	0.03	0.06	0.09
A2	1.45	1.60	1.75
A3	0.8	0.9	1
b	0.69	-	0.78
D	6.3	6.5	6.7
D1	3.00REF		
e	2.30BSC		
E	6.8	7	7.2
E1	3.4	3.5	3.6
L	0.9	-	-

TO252

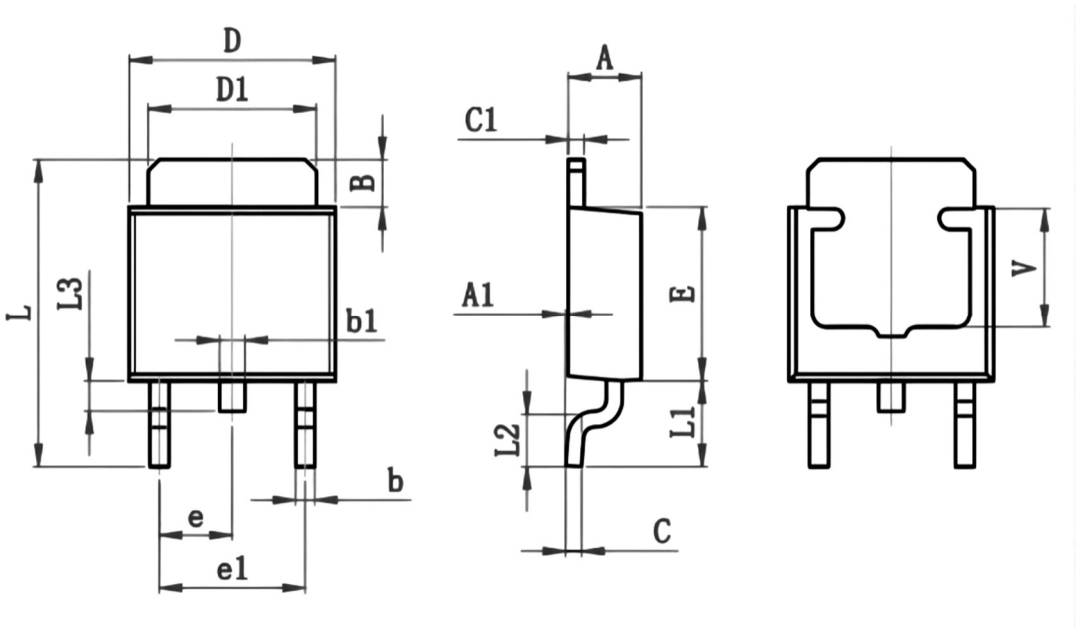

COMMON DIMENSIONS

(Unit: mm)

SYMBOL	MIN	MAX
A	2.200	2.400
A1	0.000	0.130
B	1.0 REF	
b	0.500	0.800
b1	0.700	0.900
C	0.430	0.580
c1	0.430	0.580
D	6.350	6.650
D1	5.200	5.500
E	5.400	6.200
e	2.300 TYP	
e1	4.500	4.700
L	9.500	10.20
L1	2.550	3.250
L2	1.400	1.780
L3	0.600	0.900
V	3.800 REF	

SOT89-3

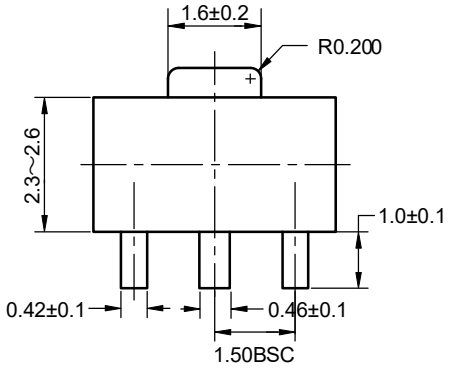

Top View

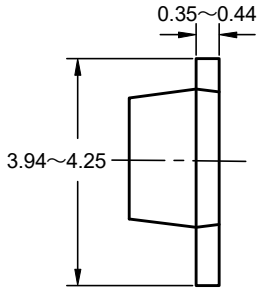

Side View

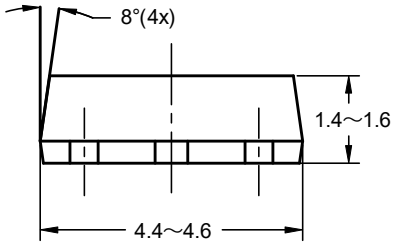

Side View

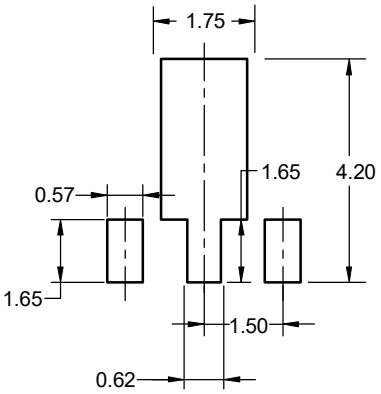

Recommended Land Pattern

Unit: mm

Marking

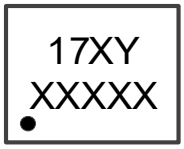

17 = Part Number

X Is V_{OUT} Version (None = ADJ Version)

Y Is Package Version (None = SOT223, B1 = SOT89-3, O = TO252-2L)

XXXXX = Tracking Number

Tape Information

SOT-223

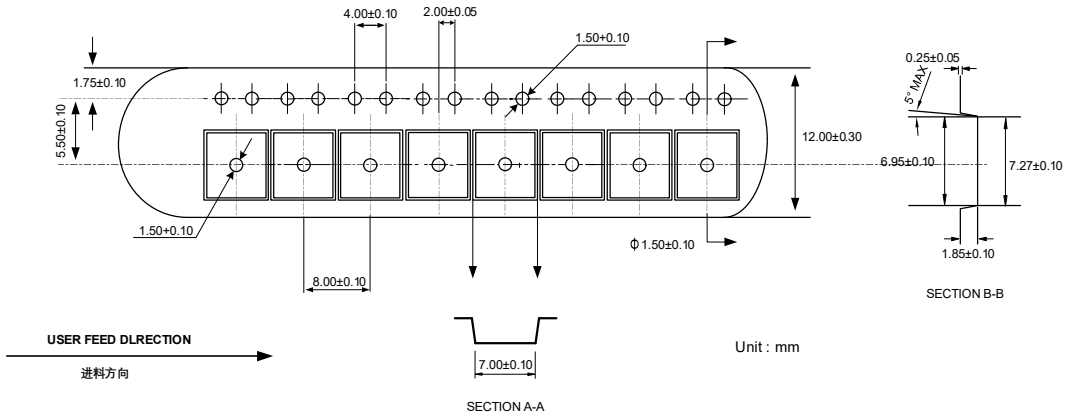

TO252

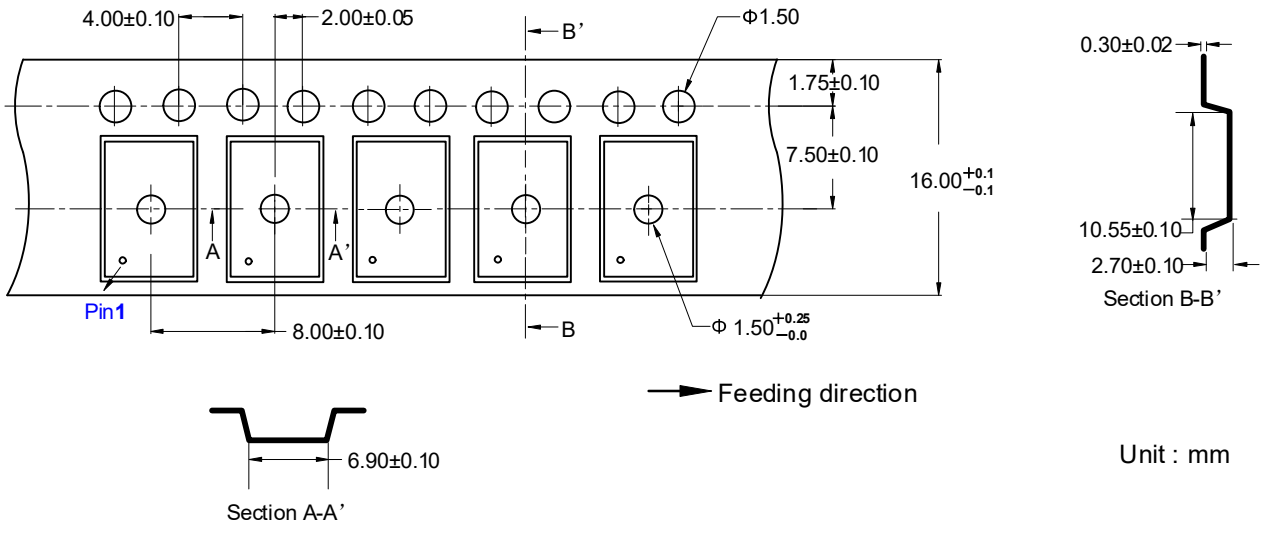

SOT89-3

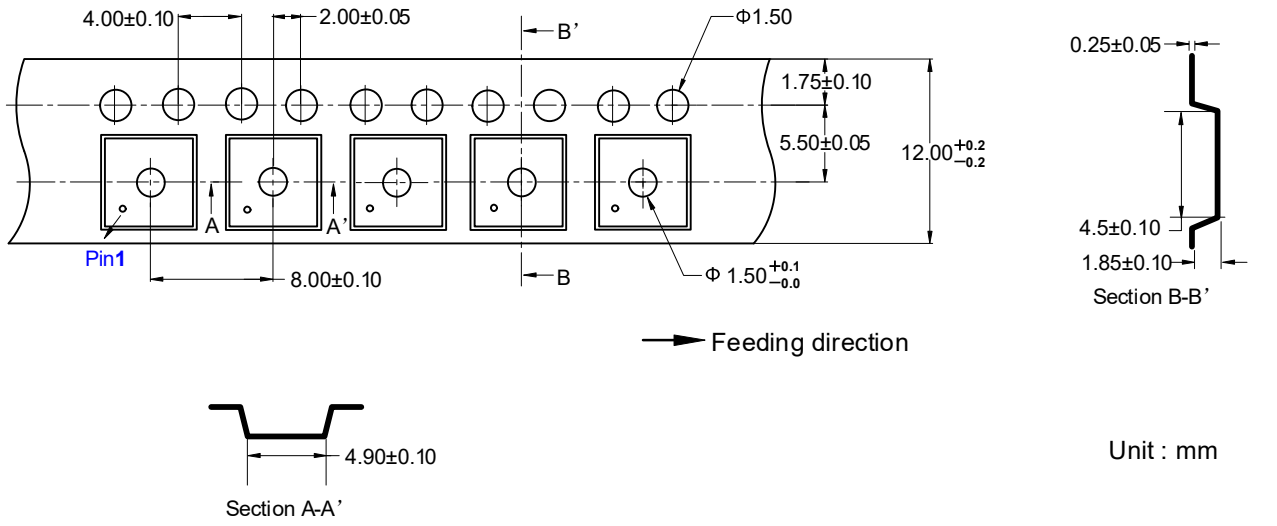

Revision History and Checking Table

Version	Date	Revision Item	Modifier	Function & Spec Checking	Package & Tape Checking
1.0	2024-12-07	Original Version	Peng Junjie	Shi Bo	Liu Jiaying
1.0.a	2026-03-16	Update Format	Yu Yifan	Yang Xiaoxu	Liu Jiaying
1.1	2026-08-05	Update Typeset	Zhang Zixuan	Yang Xiaoxu	Liu Jiaying
1.1.a	2026-08-05	Update Packing Option Add TO252 Tape Information	Yang Xiaoxu	Yang Xiaoxu	Liu Jiaying
1.1.b	2026-10-30	Update Format and Units	Yu Yifan	Yang Xiaoxu	Liu Jiaying
1.2	2026-11-04	Update Load Regulation and TO252 Package Size	Yang Xiaoxu	Yang Xiaoxu	Liu Jiaying