ET5H4XX - High Input Very-Low I_Q 500mA LDO

General Description

ET5H4XX series are the high input very low I_Q 500mA LDO with enable function that operates from 3V~16V, is designed specifically for portable battery-powered applications which require ultra-low quiescent current. The very-low consumption of type 1.0μA ensures long battery life and dynamic transient boost feature improves device transient response for wireless communication applications.

ET5H4XX series are offered SOT89-3, SOT89-5, SOT23-5, SOT23-3, DFN4(1mm × 1mm) packages.

Features

- Wide Input Voltage Range: 3.0V to 16V
- Up to 500mA Load Current
- Very Low I_Q: 1.0μA Typical
- Fixed Output Voltage are 3.0V, 3.3V, 3.6V, 5.0V, etc.
- Low Dropout: 765mV @ 500mA /V_{OUT} = 3.3V
- Excellent Load/Line Transient Response
- High Ripple Rejection: 60dB at 1KHz
- Part No. and Package Information

Part No.	Package	Packing Option	MSL
ET5H4XXB	SOT89-3	Tape and Reel, 1K/Reel	3
ET5H4XXF		Tape and Reel, 1K/Reel	3
ET5H4XXC	SOT89-5	Tape and Reel, 1K/Reel	3
ET5H4XXS	SOT23-3	Tape and Reel, 3K/Reel	3
ET5H4XXL	SOT23-5	Tape and Reel, 3K/Reel	3
ET5H4XX	SOT23-5 (Default)	Tape and Reel, 3K/Reel	3
ET5H4XXY	DFN4	Tape and Reel, 10K/Reel	1

Pin Configuration

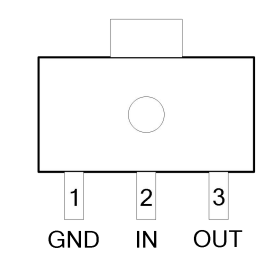

ET5H4XXB(SOT89-3)

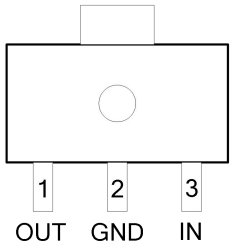

ET5H4XXF(SOT89-3)

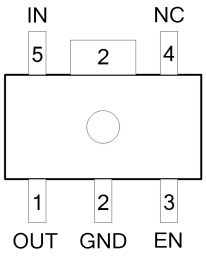

ET5H4XXC(SOT89-5)

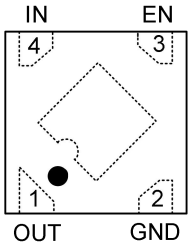

ET5H4XXY(DFN4)

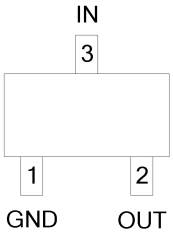

ET5H4XXS(SOT23-3)

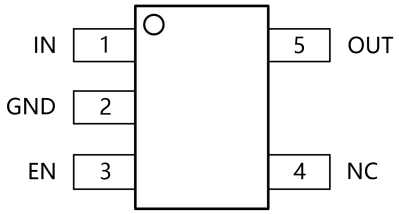

ET5H4XX(SOT23-5)

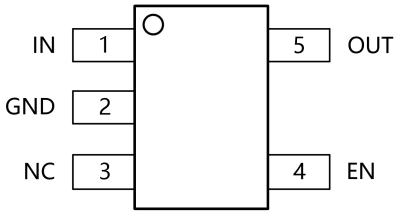

ET5H4XXL(SOT23-5)

TOP VIEW

Figure 1. Pin Configuration

Pin Function

Pin No.							Pin Name	Pin Function
SOT89-3		SOT89-5	DFN4	SOT23-3	SOT23-5			
XXB	XXF	XXC	XXY	XXS	XX	XXL		
1	2	2	2	1	2	2	GND	Ground.
2	3	5	4	3	1	1	IN	Supply Input Pin.
3	1	1	1	2	5	5	OUT	Output Pin.
		3	3		3	4	EN	Enable Control Input, Active High.
		4			4	3	NC	No Connection.

Block Diagram

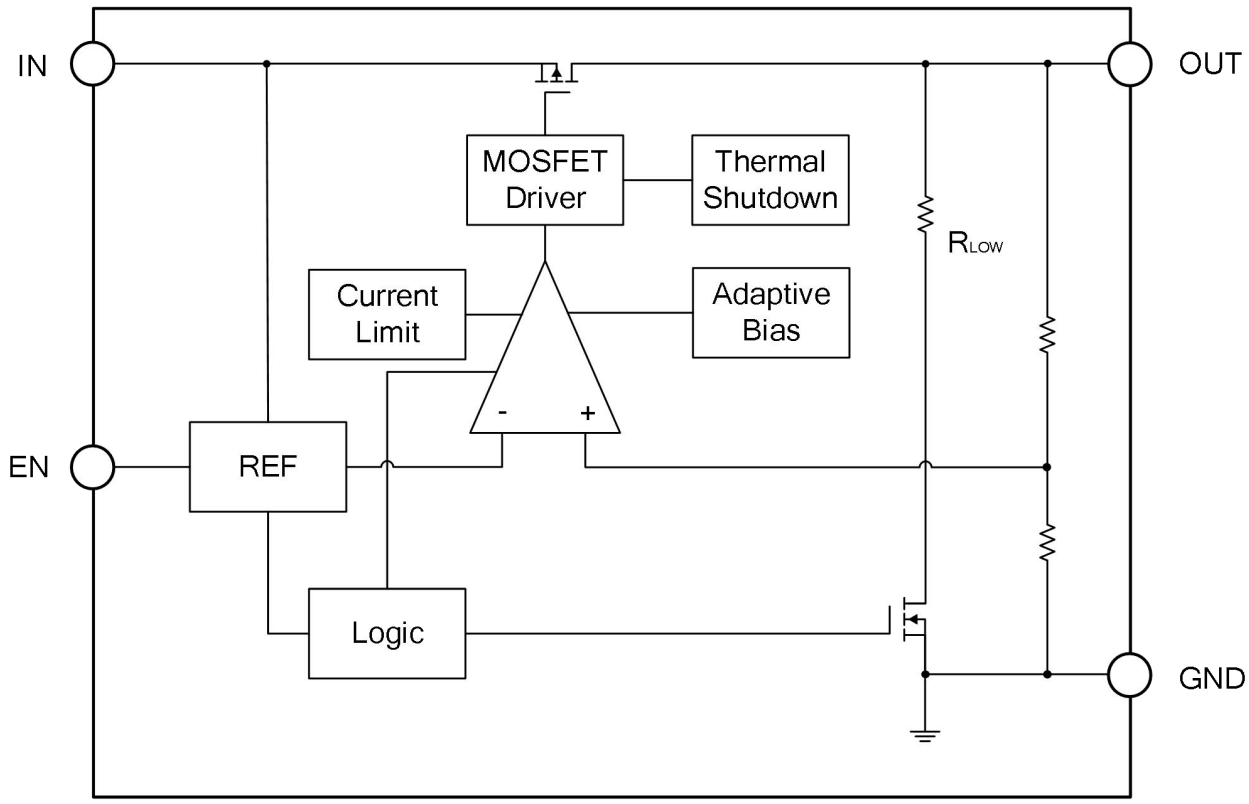

Figure 2. Block Diagram

Functional Description

Input Capacitor

A 4.7μF~10μF ceramic capacitor is recommended to connect between IN and GND pins to decouple input power supply glitch and noise. The amount of the capacitance may be increased without limit. This input capacitor must be located as close as possible to the device to assure input stability and less noise. For PCB layout, a wide copper trace is required for both IN and GND.

Output Capacitor

An output capacitor is required for the stability of the LDO. The recommended output capacitance is from 1μF to 10μF, Equivalent Series Resistance (ESR) is from 5mΩ to 100mΩ, and temperature characteristics are X7R or X5R. Higher capacitance values help to improve load/line transient response. The output capacitance may be increased to keep low undershoot/overshoot. Place output capacitor as close as possible to OUT and GND pins.

Enable (If EN Pin Exist)

The ET5H4XX delivers the output power when it is set to enable state. When it works in disable state, there is no output power and the operation quiescent current is almost zero. The enable pin (EN) is active high.

Dropout Voltage

The ET5H4XX uses a PMOS pass transistor to achieve low dropout. When (V_{IN} - V_{OUT}) is less than the dropout voltage (V_{DROP}), the PMOS pass device is in the linear region of operation and the input-to-output resistance is the $R_{DS(ON)}$ of the PMOS pass element. V_{DROP} scales approximately with output current because the PMOS device behaves like a resistor in dropout mode. As with any linear regulator, PSRR and transient response degrade as (V_{IN} - V_{OUT}) approaches dropout operation.

Thermal Shutdown

Thermal shutdown protection disables the output when the junction temperature rises to approximately 160°C. Disabling the device eliminates the power dissipated by the device, allowing the device to cool. When the junction temperature cools to approximately 140°C, the output circuitry is again enabled.

Depending on power dissipation, thermal resistance, and ambient temperature, the thermal protection circuit may cycle on and off. This cycling limits regulator dissipation, protecting the LDO from damage as a result of overheating. Activating the thermal shutdown feature usually indicates excessive power dissipation as a result of the product of the (V_{IN} - V_{OUT}) voltage and the load current. For reliable operation, limit junction temperature to 150°C maximum.

Thermal Considerations

For continuous operation, do not exceed absolute maximum junction temperature. The maximum power dissipation depends on the thermal resistance of the IC package, PCB layout, rate of surrounding airflow, and difference between junction and ambient temperature. The maximum power dissipation can be calculated by the following formula:

$$\mathbf{P_{D(MAX)} = (T_{J(MAX)} - T_A) / \theta_{JA}}$$

where $T_{J(MAX)}$ is the maximum junction temperature, T_A is the ambient temperature, and θ_{JA} is the junction to ambient thermal resistance.

For recommended operating condition specifications the maximum junction temperature is 150°C and T_A is the ambient temperature. The junction to ambient thermal resistance, θ_{JA} is layout dependent.

For SOT89-5 package, the thermal resistance, θ_{JA} is 80°C/W on the test board. The maximum power dissipation at T_A = 25°C can be calculated by the following formula:

$P_{D(MAX)}$ = (150°C - 25°C) / (80°C/W) = 1.562W for SOT89-5 package

Current-Limit Protection

The ET5H4XX provides current limit function to prevent the device from damages during over-load or shorted-circuit condition. This current is detected by an internal sensing transistor.

Layout Guidelines

- Place input and output capacitors as close to the device as possible.
- Use copper planes for device connections in order to optimize thermal performance.
- Place thermal vias around the device to distribute heat.
- Do not place a thermal via directly beneath the thermal pad. A via can wick solder or solder paste away from the thermal pad joint during the soldering process, leading to a compromised solder joint on the thermal pad.

Absolute Maximum Ratings

Symbol	Rating	Value	Unit
V_{IN}	Input Voltage (1)	-0.3~20	V
V_{OUT}	Output Voltage	-0.3~6	V
V_{EN}	Chip Enable Input (If EN Pin Exist)	-0.3~16	V
$T_{J(MAX)}$	Maximum Junction Temperature	150	°C
T_{STG}	Storage Temperature	-65~150	°C
V_{ESD} (2)	HBM Capability	±2000	V
	CDM Capability	±1500	V
I_{LU} (2)	Latch up Current Maximum Rating	±200	mA

Stresses exceeding those listed in the Maximum Ratings table may damage the device. If any of these limits are exceeded, device functionality should not be assumed, damage may occur and reliability may be affected.

Note1: Refer to Electrical Characteristics and Application Information for Safe Operating Area.

Note2: This device series incorporates ESD protection and is tested by the following methods:

ESD Human Body Model tested per JEDEC JS-001;

CDM tested per JEDEC JS-002;

Latch up Current Maximum Rating tested per JEDEC JESD78F.

Thermal Characteristics

Symbol	Package	Ratings	Value	Unit
$R_{\theta JA}$	SOT89-5	Thermal Characteristics, Thermal Resistance, Junction-to-Air	80	°C/W
	SOT89-3		135	
	SOT23-5		250	
	SOT23-3		360	
	DFN4		250	
Power Dissipation @25°C	SOT89-5	PCB Board Dimension: 40mm x 40mm (2layer) Copper :1OZ	1500	mW
	SOT89-3		920	
	SOT23-5		500	
	SOT23-3		350	
	DFN4		500	

Recommended Operating Conditions

Symbol	Item	Rating	Unit
V_{IN}	Input Voltage	3.0 to 16	V
I_{OUT}	Output Current	0 to 500	mA
T_J	Operating Junction Temperature	-40 to 125	°C
C_{IN}	Effective Input Ceramic Capacitor Value	4.7 to 10	μF
C_{OUT}	Effective Output Ceramic Capacitor Value	1 to 10	μF
ESR	Input and Output Capacitor Equivalent Series Resistance (ESR)	5 to 100	mΩ

Electrical Characteristics

(V_{IN} = V_{OUT} + 2V; I_{OUT} = 1mA, C_{IN} = 4.7μF, C_{OUT} = 1.0μF, unless otherwise noted. Typical values are at T_A = +25°C.)

Symbol	Parameter	Test Conditions		Min	Typ	Max	Unit
V_{IN}	Operating Input Voltage (3)			3.0		16	V
V_{OUT}	Output Voltage	I_{OUT} = 1mA, 25°C		-2%		+2%	V
		I_{OUT} = 1mA, -40~125°C		-3%		+3%	
I_{Q_ON}	Quiescent Current	I_{OUT} = 0mA, 25°C			1	2	μA
I_{Q_OFF}	Standby Current	V_{EN} = 0V (If EN Pin Exist), 25°C			0.1	1	μA
$Line_{REG}$	Line Regulation(6)	V_{IN} = V_{OUT} + 2V to 16V, I_{OUT} = 10mA (ΔV_{OUT} / ΔV_{IN} / V_{OUT})			0.05	0.20	%/V
$Load_{REG}$	Load Regulation(6)	1mA ≤ I_{OUT} ≤ 500mA, V_{IN} = V_{OUT} + 1.5V			30	60	mV
V_{DROP}	Dropout Voltage (4) (6)	V_{IN} Falling from V_{OUT} + 1.5V Until V_{OUT} = 0.98 * $V_{_SET}$ I_{OUT} = 500mA	V_{OUT} = 3.0V		770	1150	mV
			V_{OUT} = 3.3V		765	1125	
			V_{OUT} = 3.6V		760	1100	
			V_{OUT} = 5.0V		750	1075	
I_{LMT}	Current Limit	V_{IN} = V_{OUT} + 1.5V		550	900		mA
I_{SC}	Short Circuit Current Limit	V_{OUT} = 0V			70		mA
V_{IH}	EN Pin Threshold Voltage	EN Input Voltage “H” (If EN Pin Exist)		1.2			V
V_{IL}	EN Pin Threshold Voltage	EN Input Voltage “L” (If EN Pin Exist)				0.3	V
I_{EN}	EN Pin Current	V_{EN} = 0~16V (If EN Pin Exist)			1		μA
PSRR	Power Supply Rejection Ratio (5)	f = 1kHz, V_{IN} = V_{OUT} + 2V I_{OUT} = 20mA			60		dB
e_N	Output Noise Voltage(5)	V_{IN} = V_{OUT} + 2V, I_{OUT} = 1mA, f = 10Hz to 100KHz, V_{OUT} = 3V, C_{OUT} = 1μF			120		μVrms
T_{SD}	Thermal Shutdown Temperature (5)	Temperature Increasing from T_A = +25°C			160		°C
T_{SDH}	Thermal Shutdown Hysteresis (5)	Temperature Falling from T_{SD}			20		°C

Note3: Here V_{IN} means internal circuit can work normal. If V_{IN} < V_{OUT}, Output voltage follows V_{IN}(I_{OUT} = 1mA), circuit is safety.

Note4: V_{DROP} FT test method: test the V_{OUT} voltage at V_{SET} + $V_{DROPMAX}$ with 500mA output current.

Note5: Guaranteed by design and characterization. not a FT item.

Note6: The maximum load current can be calculated according to the following formula：

$$I_{OUT_MAX} = (T_J - T_A) / R_{\theta JA} / (V_{IN} - V_{OUT})$$

Typical Characteristics

VOLTAGE VERSION 3.3V

(V_{IN} = V_{OUT} + 2V, I_{OUT} = 1mA, C_{IN} = 4.7μF, C_{OUT} = 1.0μF, unless otherwise noted. Typical values are at T_A = +25°C.)

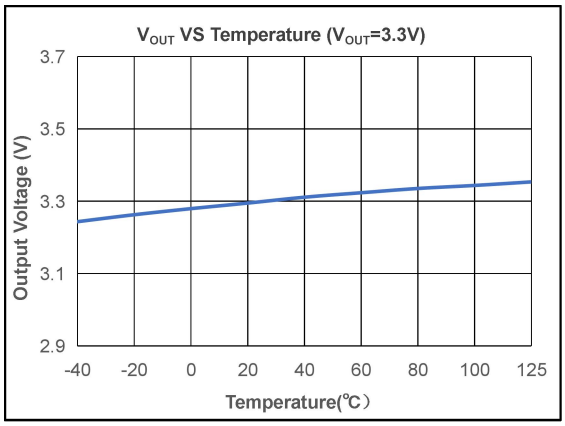

Output Voltage VS Temperature

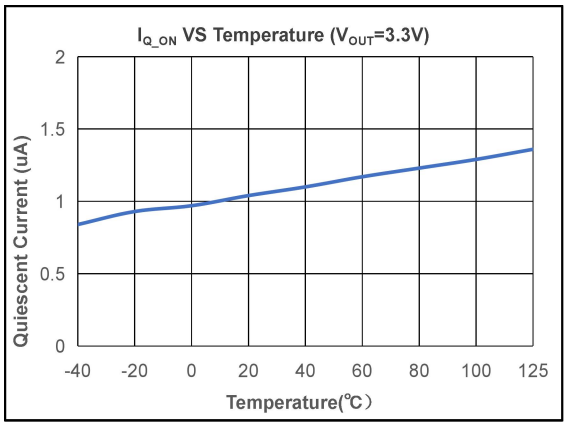

Supply Current VS Temperature

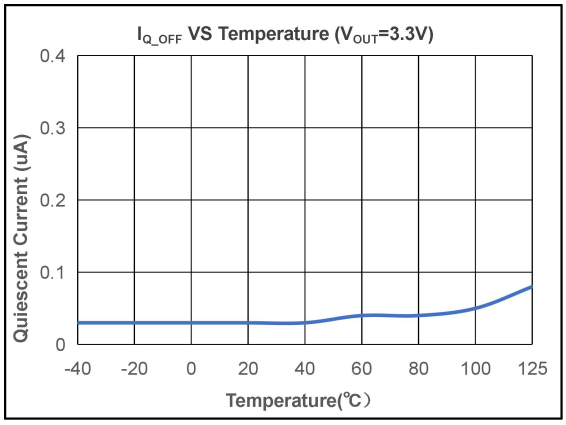

Standby Current VS Temperature

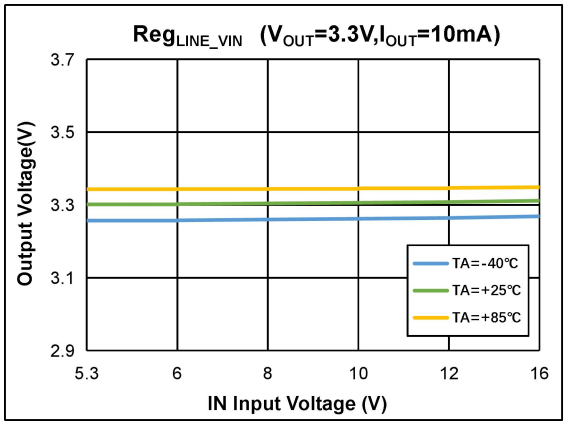

Output Voltage VS Input Voltage(I_{OUT} = 1mA)

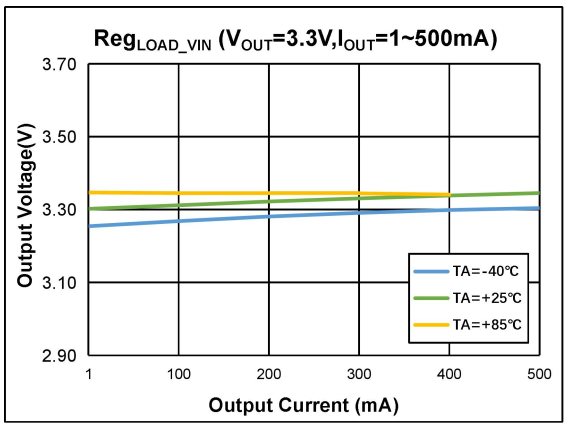

Output Voltage VS Output Current

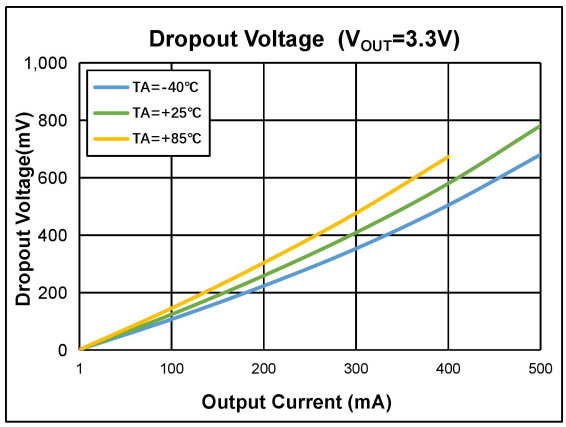

Dropout Voltage VS Output Current

Typical Characteristics (Continued)

VOLTAGE VERSION 3.3V

(V_{IN} = V_{OUT} + 2V, I_{OUT} = 1mA, C_{IN} = 4.7μF, C_{OUT} = 1.0μF, unless otherwise noted. Typical values are at T_A = +25°C.)

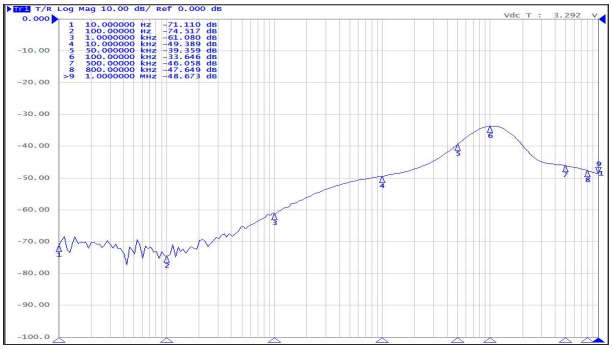

PSRR (I_{OUT} = 20mA)

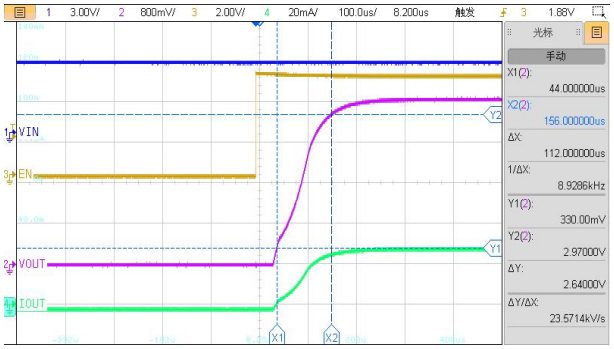

Turn On Speed VS EN Voltage (I_{OUT} = 30mA)

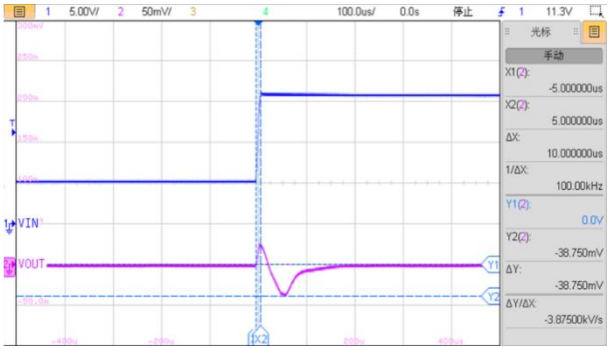

Line Transient Response

V_{IN} = 5.3V~16V, V_{OUT} = 3.3V, I_{OUT} = 1mA

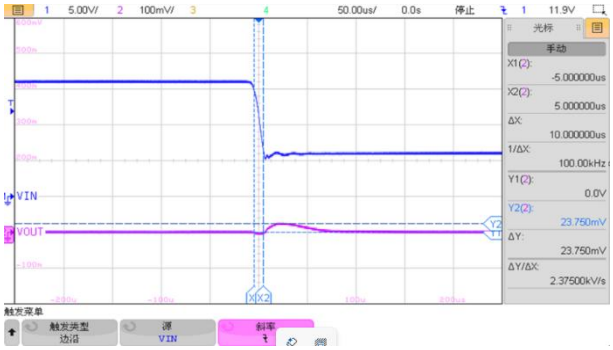

Line Transient Response

V_{IN} = 16V~5.3V, V_{OUT} = 3.3V, I_{OUT} = 1mA

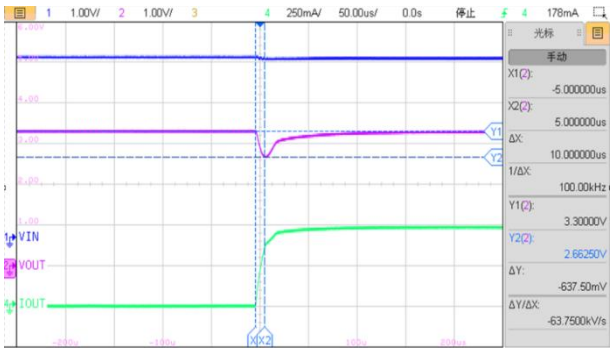

Load Transient Response

V_{IN} = 5.3V, V_{OUT} = 3.3V, I_{OUT} = 1mA~500mA

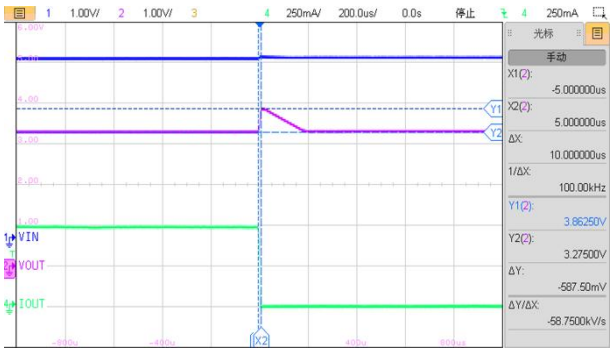

Load Transient Response

V_{IN} = 5.3V, V_{OUT} = 3.3V, I_{OUT} = 500mA~1mA

Application Circuits

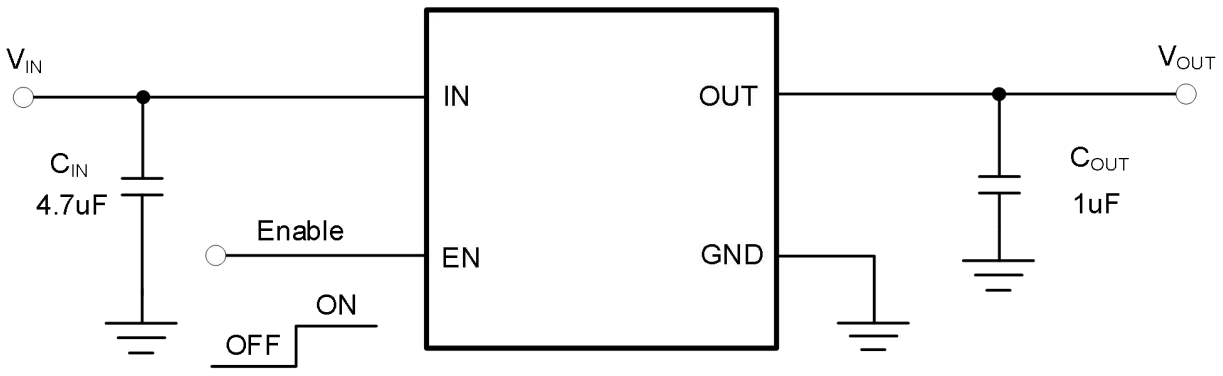

Package With EN Function

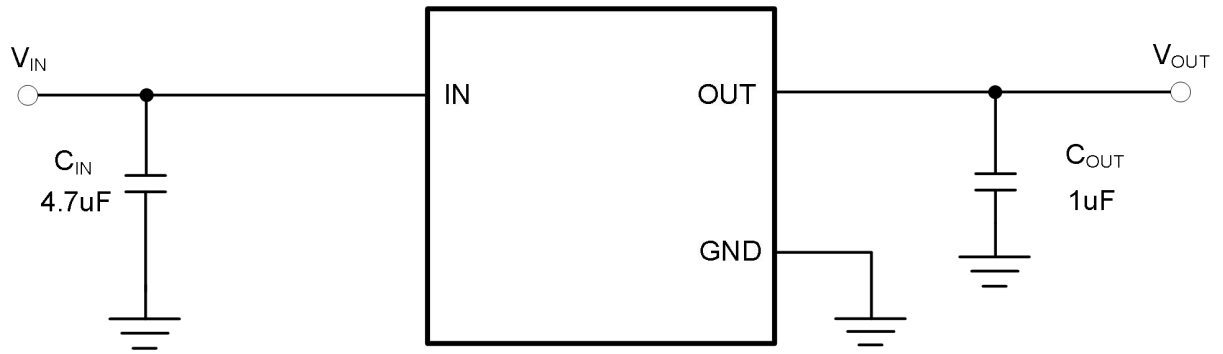

Package Without EN Function

Figure 3. Application Circuits

Package Dimension

SOT89-3

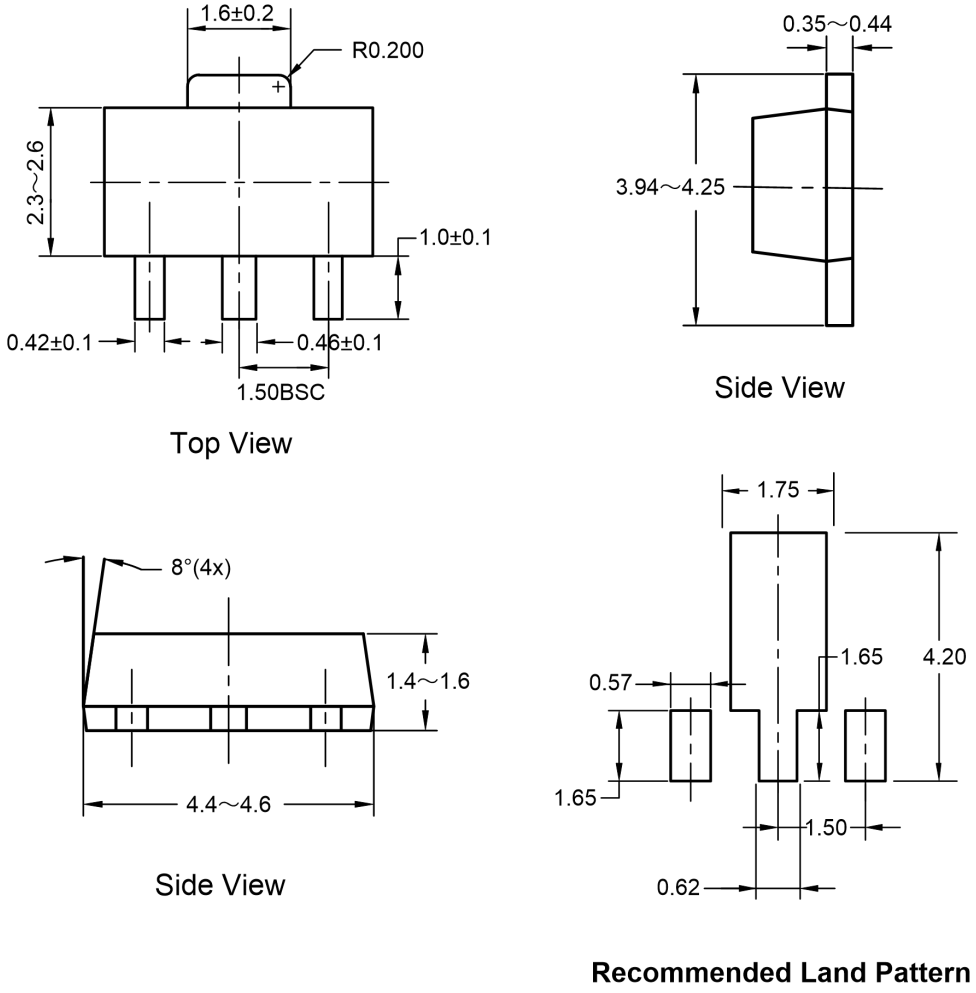

Unit: mm

Figure 4. SOT89-3 Package Dimension

SOT89-5

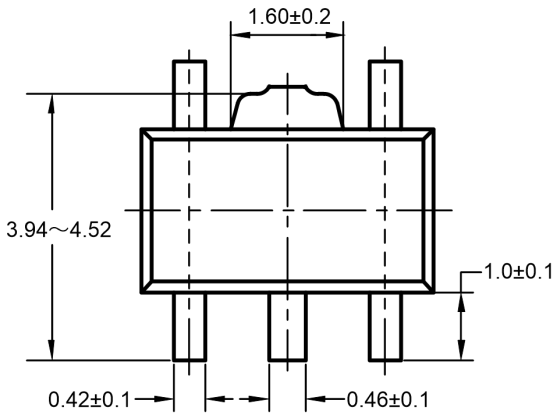

Top View

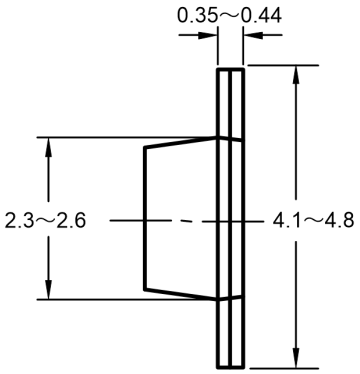

Side View

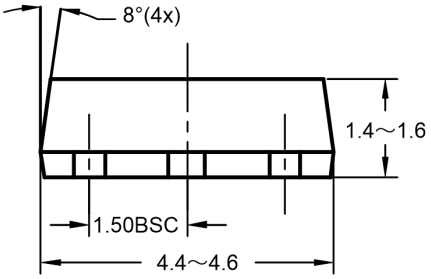

Side View

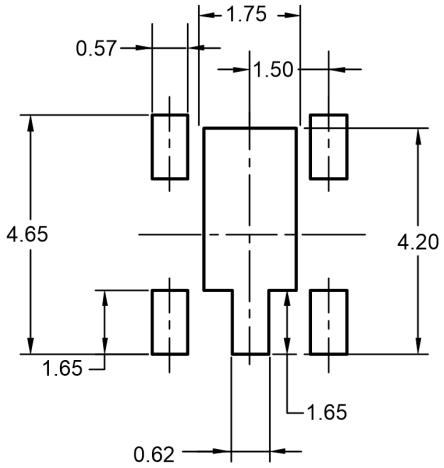

Recommended Land Pattern

Unit: mm

Figure 5. SOT89-5 Package Dimension

SOT23-5

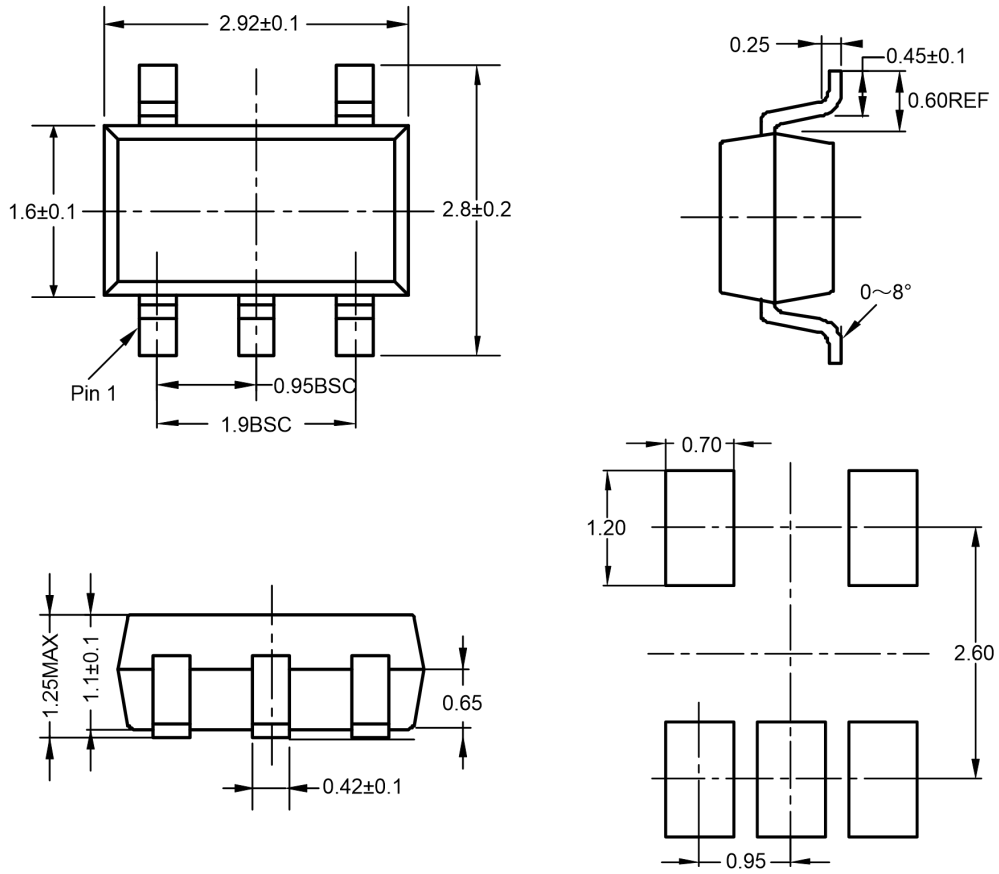

Recommended Land Pattern

Unit: mm

Figure 6. SOT23-5 Package Dimension

SOT23-3

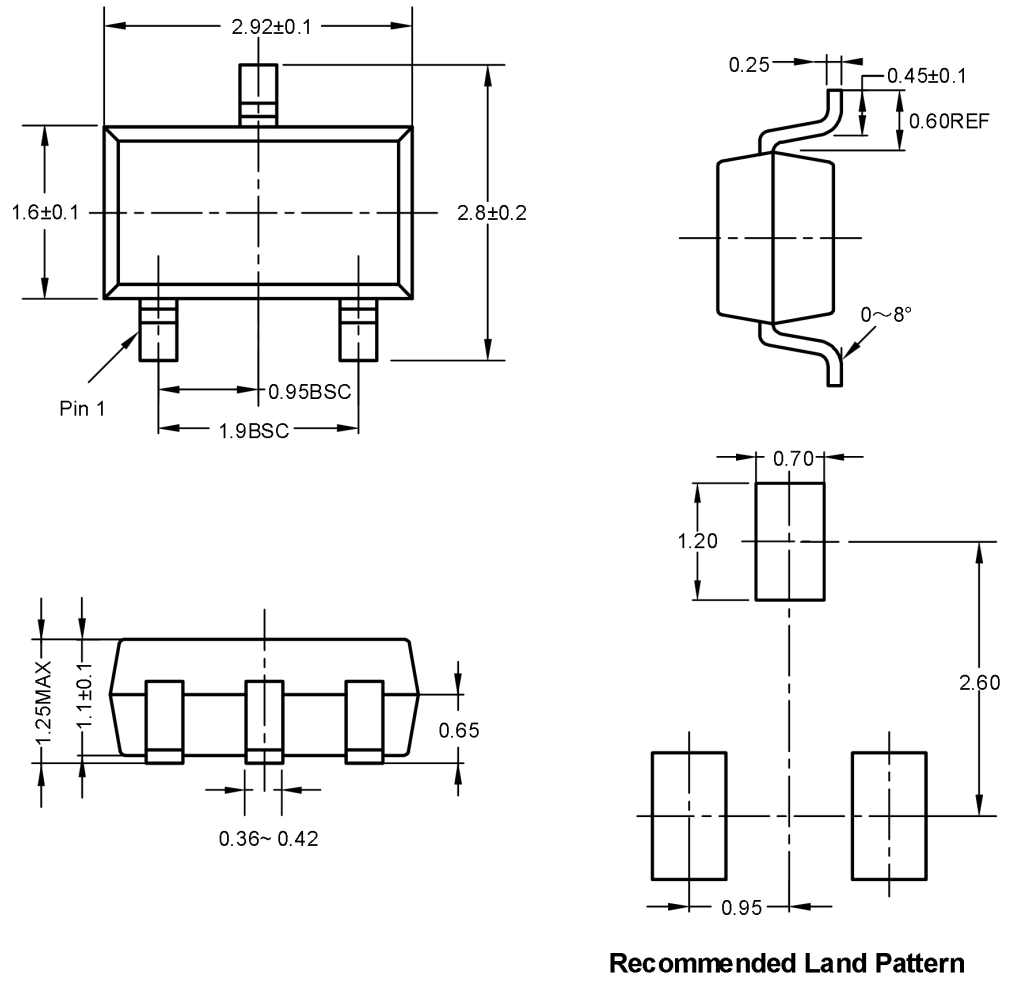

Unit: mm

Figure 7. SOT23-3 Package Dimension

DFN4(1mm × 1mm)

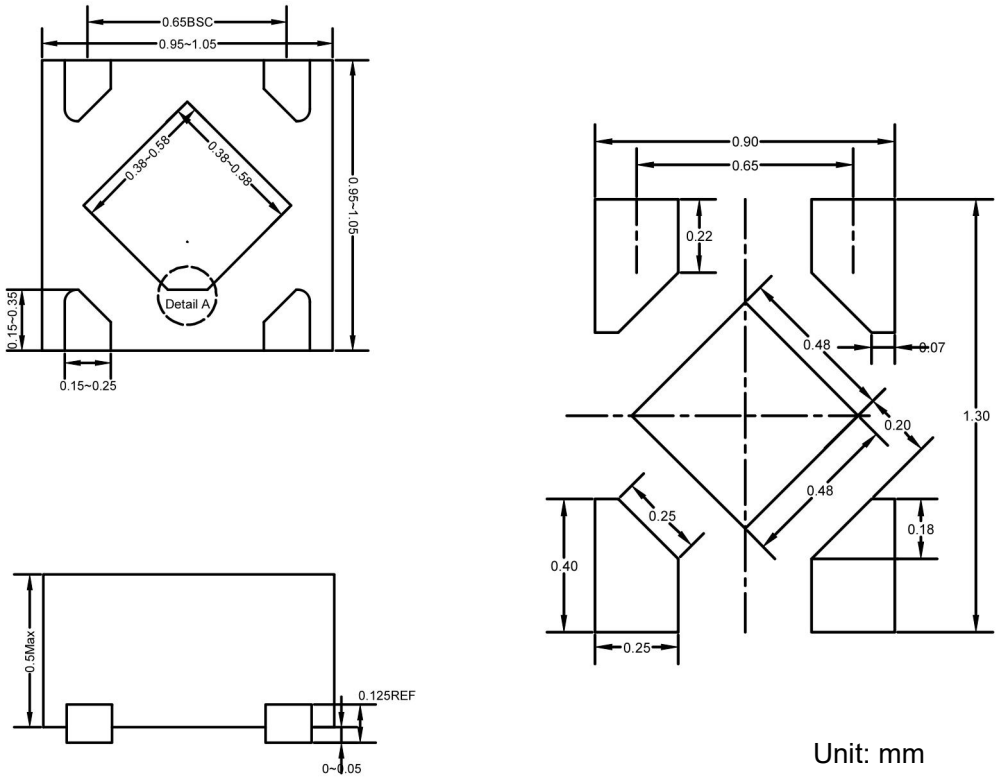

Unit: mm

Detail A: (PIN1 shape)

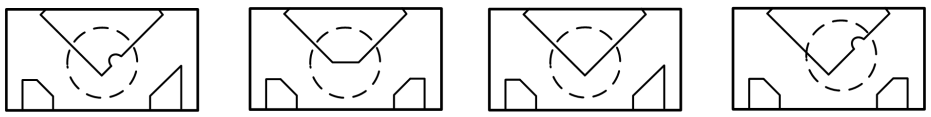

Figure 8. DFN4 Package Dimension

Tape Information

SOT89-3

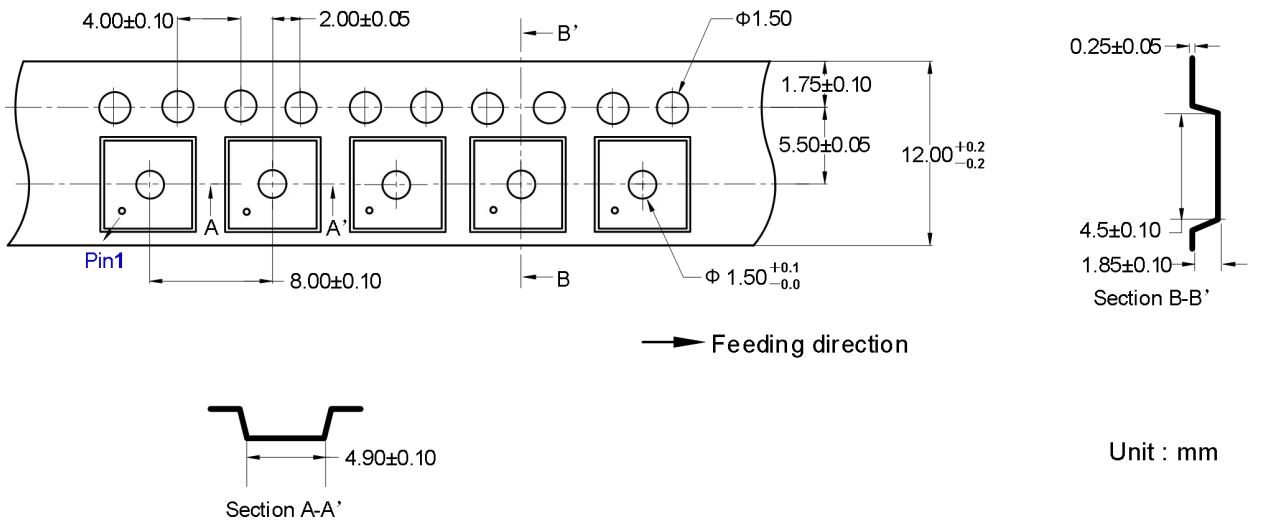

Figure 9. SOT89-3 Tape Information

SOT89-5

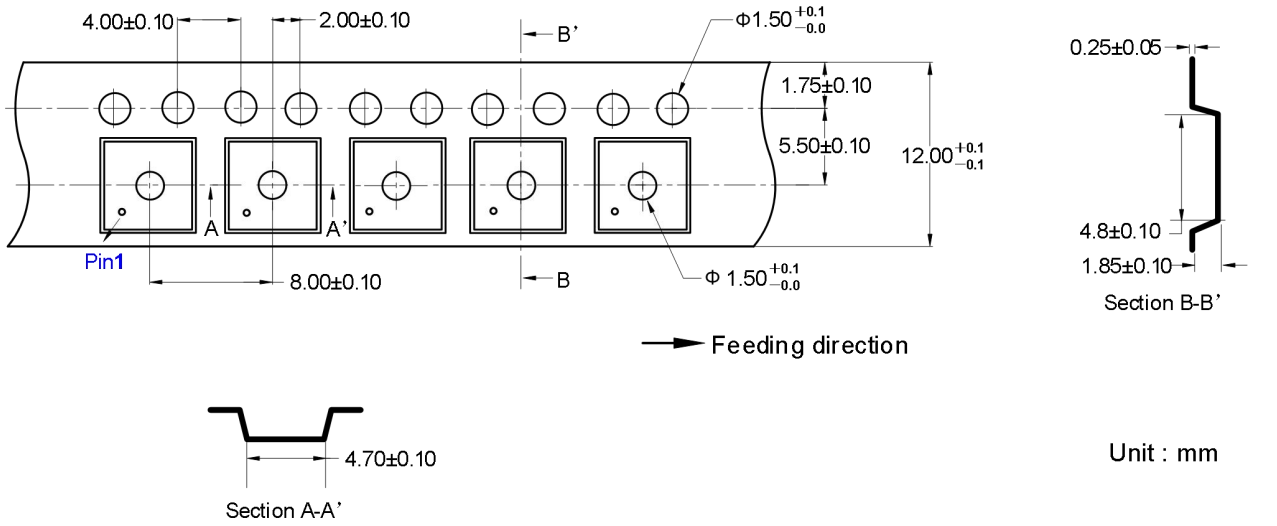

Figure 10. SOT89-5 Tape Information

SOT23-3

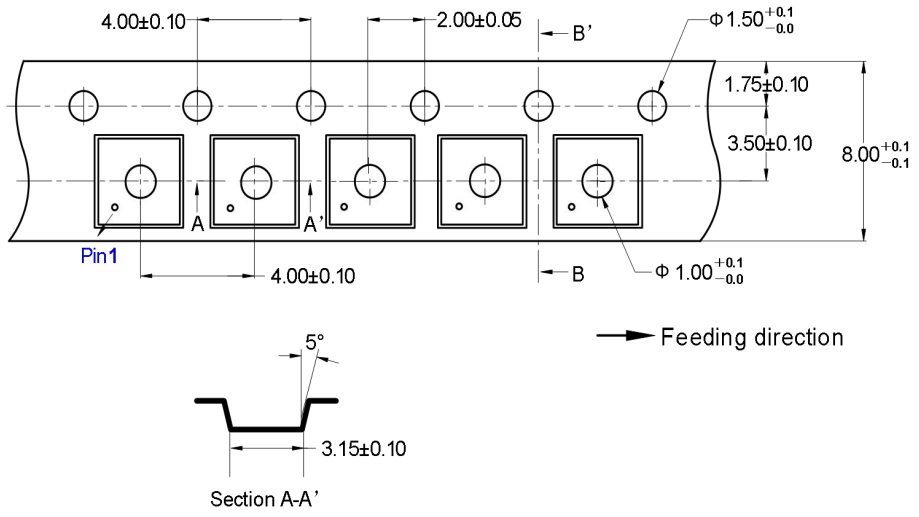

Figure 11. SOT23-3 Tape Information

SOT23-5

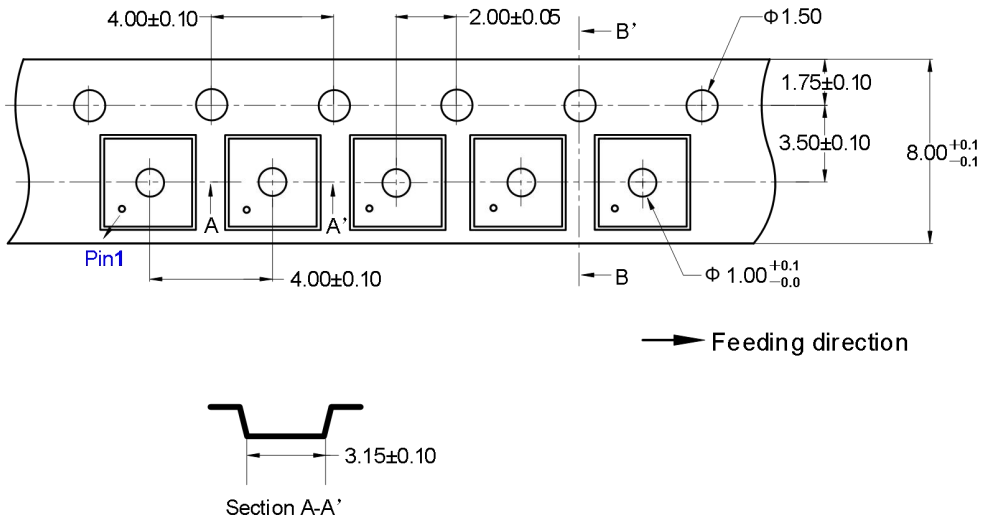

Figure 12. SOT23-5 Tape Information

DFN4

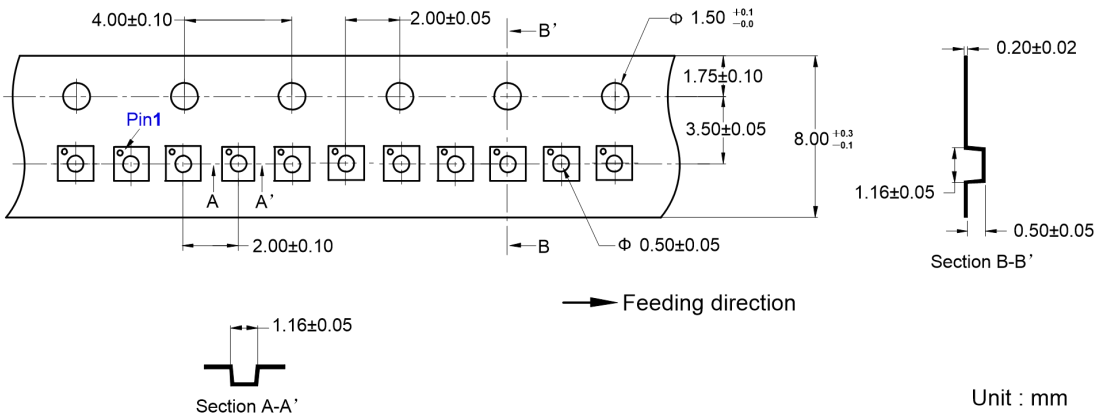

Figure 13. DEN4 Tape Information

Marking Information

SOT89-3

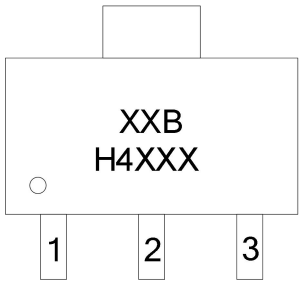

XXB - Part Number

H4XXX - Tracking Number

Figure 14. SOT89-3 Marking Information

SOT23-3

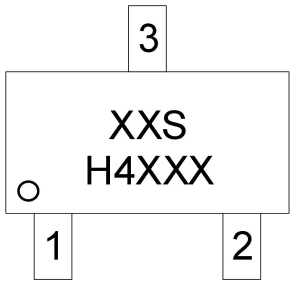

XXS - Part Number
H4XXX - Tracking Number
Figure 16. SOT23-3 Marking Information

SOT23-5

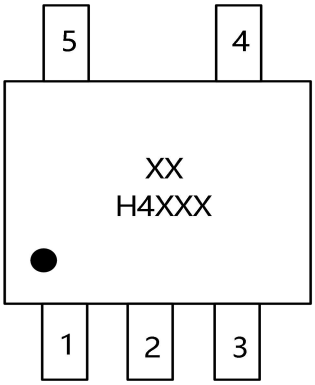

XX - Part Number
H4XXX - Tracking Number
Figure 17. SOT23-5 Marking Information

Revision History and Checking Table

Version	Date	Revision Item	Modifier	Function & Spec Checking	Package & Tape Checking
0.0	2020-06-19	Preliminary Version	Liuxm	Liuxm	Zhujl
0.1	2023-09-09	Update to 500mA Version	Yangxx	Liuxm	Liujy
0.2	2025-04-23	Update Typical Characteristics	Pengjj	Liuxm	Liujy
1.0	2025-06-18	Official Version	Pengjj	Liuxm	Liujy
1.1	2025-06-18	Update B Version	Shib	Liuxm	Liujy
1.2	2025-10-15	Update T_J Range	Yangxx	Liuxm	Liujy
1.2.a	2026-03-17	Update C_{IN_Min} Value	Yangxx	Liuxm	Liujy
1.2.b	2026-07-20	Add Tape & Marking Information	Yangxx	Liuxm	Liujy
1.2.c	2026-09-11	Update Typical Characteristics	Yangxx	Liuxm	Liujy
1.2.d	2026-11-02	Update EC Table	Xut	Liuxm	Liujy