Single 3-Input Positive-AND Gate

General Description

The ET74LVC1G11 is a single 3-input positive-AND gate operating from a 1.65V to 5.5V supply. This device is fabricated with advanced CMOS technology to achieve ultra-high speed with high output drive.

Features

- Designed for 1.65V to 5.5V V_{CC} Operation
- Over-voltage Tolerant Inputs Accept Voltages to 5.5V
- ±32mA Balanced Output Sink and Source Capability
- Near Zero Static Supply Current Substantially Reduces System Power Requirements
- These Devices are Pb-Free and RoHS Compliant
- ESD Protection Complies with JESD22 Standard
  -- HBM: ±2000V Pass (JEDEC JS-001)
  -- CDM: ±1000V Pass (JEDEC JS-002)
- Latch-up Performance Exceeds ±100mA per JEDEC JESD78F
- Part No. and Package Information

Part No.	Package	Packing Option	MSL
ET74LVC1G11	SC70-6 (1.3mm × 2.1mm)	Tape and Reel, 3K/Reel	1
ET74LVC1G11T	SOT23-6 (1.6mm × 2.9mm)	Tape and Reel, 3K/Reel	3
ET74LVC1G11Y	DFN6 (1.0mm × 1.5mm)	Tape and Reel, 3K/Reel	1

Pin Configuration

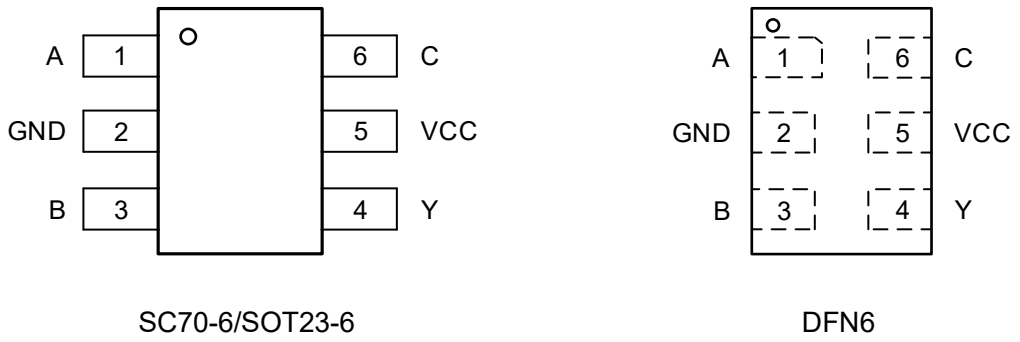

Figure1. Pin Configuration

Pin Function

SC70-6/SOT23-6/DFN6

Pin No.	Pin Name	Function
1	A	Input A
2	GND	Ground
3	B	Input B
4	Y	Output Y
5	VCC	Supply Voltage
6	C	Input C

Block Diagram

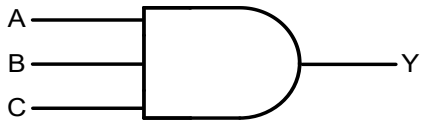

Figure2. Logic Symbol

Functional Table

Input			Output
A	**B**	**C**	**Y**
H	H	H	H
L	X	X	L
X	L	X	L
X	X	L	L

H = HIGH voltage level;

L = LOW voltage level;

X = Don’t care.

Absolute Maximum Ratings

Symbol	Parameter		Value	Unit
V_{CC}	DC Supply Voltage (VCC Pin)		-0.5 to 6.5	V
I_{IK}	DC Input Diode Current, V_I < GND		-50	mA
V_I	DC Input Voltage [(1)]		-0.5 ≤ V_I ≤ 6.5	V
I_{OK}	DC Output Diode Current, V_O < GND		±50	mA
V_O	DC Output Voltage Output in Higher or Low State		-0.5 to V_{CC} + 0.5	V
I_O	DC Output Sink Current, V_O = 0V to V_{CC}		±50	mA
I_{CC}	DC Supply Current per Supply Pin		100	mA
I_{GND}	DC Ground Current per Supply Pin		-100	mA
T_J	Max Junction Temperature		150	°C
T_{STG}	Storage Temperature Range		-65 to 150	°C
V_{ESD}	ESD Classification	Human Body Model [(2)]	±2000	V
		Charged Device Model [(3)]	±1000	
I_{LU}	Max Latch Up Current Above V_{CC} and GND at 125°C [(4)]		±100	mA

Stresses exceeding those listed in the Maximum Ratings table may damage the device. If any of these limits are exceeded, device functionality should not be assumed, damage may occur and reliability may be affected.

Note1: I_O absolute maximum rating must be observed.

Note2: HBM tested per JEDEC JS-001;

Note3: CDM tested per JEDEC JS-002;

Note4: Latch up Current Maximum Rating tested per JEDEC JESD78F.

Thermal Characteristics

Symbol	Package	Ratings	Value	Unit
$R_{\theta JA}$	SC70-6	Thermal Characteristics, Thermal Resistance, Junction-to-Air	280	°C/W
	SOT23-6		180	
	DFN6		440	
P_D	SC70-6	Power Dissipation in Still Air at 85°C	230	mW
	SOT23-6		360	
	DFN6		150	

Recommended Operating Conditions

Symbol	Parameter		Min	Max	Unit
V_{CC}	DC Supply Voltage Operating		1.65	5.5	V
V_I	DC Input Voltage		0	V_{CC}	V
V_O	DC Output Voltage (High or Low State)		0	V_{CC}	V
T_A	Operating Temperature Range		-40	125	°C
t_r, t_f	Input Rise and Fall Time	V_{CC} = 1.65V to 2.7V		20	ns/V
		V_{CC} = 2.7V to 5.5V		10	

Electrical Characteristics

DC Electrical Characteristics

Symbol	Parameter	Condition	V_{CC}(V)	T_A = 25°C			-40°C ≤ T_A ≤ 125°C		Unit
				Min	Typ	Max	Min	Max	
V_{IH}	High-Level Input Voltage		1.65~1.95	0.65V_{CC}			0.65V_{CC}		V
			2.3~2.7	1.7			1.7		
			2.7~3.6	2.0			2.0		
			4.5~5.5	0.7V_{CC}			0.7V_{CC}		
V_{IL}	Low-Level Input Voltage		1.65~1.95			0.35V_{CC}		0.35V_{CC}	V
			2.3~2.7			0.7		0.7	
			2.7~3.6			0.8		0.8	
			4.5~5.5			0.3V_{CC}		0.3V_{CC}	
V_{OH}	High-Level Output Voltage	I_{OH} = -100uA	1.65~5.5	V_{CC} - 0.1			V_{CC} - 0.1		V
		I_{OH} = -4mA	1.65	1.2	1.54		0.95		
		I_{OH} = -8mA	2.3	1.9	2.15		1.7		
		I_{OH} = -12mA	2.7	2.2	2.5		1.9		
		I_{OH} = -24mA	3.0	2.3	2.62		2.0		
		I_{OH} = -32mA	4.5	3.8	4.11		3.4		
V_{OL}	Low-Level Output Voltage	I_{OL} = -100uA	1.65~5.5			0.1		0.1	V
		I_{OL} = 4mA	1.65		0.07	0.45		0.7	
		I_{OL} = 8mA	2.3		0.12	0.3		0.45	
		I_{OL} = 12mA	2.7		0.17	0.4		0.6	
		I_{OL} = 24mA	3.0		0.33	0.55		0.8	
		I_{OL} = 32mA	4.5		0.39	0.55		0.8	
I_I	Input Leakage Current	V_I = 5.5V or GND	0~5.5		±0.1	±1		±1	uA
I_{OFF}	Power Off Leakage Current	V_I = 5.5V or V_O = 5.5V	0		±0.1	±2		±2	uA
I_{CC}	Quiescent Supply Current	V = 5.5V or GND	1.65~5.5		0.1	4		4	uA
ΔI_{CC}	Additional Supply Current	Per Pin: V_I = V_{CC} - 0.6V; I_O = 0mA	2.3~5.5		5	500		500	uA

AC Electrical Characteristics

$t_r = t_f = 3ns$

Symbol	Parameter	Condition	V_{CC}(V)	T_A = 25°C			-40°C ≤ T_A ≤ 125°C		Unit
				Min	Typ	Max	Min	Max	
t_{PD}	Propagation Delay (Figure3 and 4)	R_L = 1kΩ; C_L = 30pF	1.65~1.95	1.5	6.7	13.1	1.5	18	ns
		R_L = 500Ω; C_L = 30pF	2.3~2.7	1.0	4.1	7.9	1.0	9.5	
		R_L = 500Ω; C_L = 50pF	2.7	1.0	4.4	8.5	1.0	10	
		R_L = 500Ω; C_L = 50pF	3.0~3.6	1.0	4.0	7.8	1.0	9.4	
		R_L = 500Ω; C_L = 50pF	4.5~5.5	1.0	3.4	6.6	1.0	8.1	

Capacitance Characteristics

Symbol	Parameter	Condition	Typ	Unit
C_{IN}	Input Capacitance	V_{CC} = 5.5V, V_I = 0V or V_{CC}	4	pF
C_{PD}	Power Dissipation Capacitance [5]	10MHz, V_{CC} = 3.3V, V_I = 0V or V_{CC}	11	pF

Note5: C_{PD} is used to determine the dynamic power dissipation (P_D in μW).

$P_D = C_{PD} \times V_{CC}{}^2 \times f_i \times N + \Sigma(C_L \times V_{CC}{}^2 \times f_o)$ where:

f_i = input frequency in MHz;

f_o = output frequency in MHz;

C_L = output load capacitance in pF;

V_{CC} = supply voltage in V;

N = number of inputs switching;

$\Sigma(C_L \times V_{CC}{}^2 \times f_o)$ = sum of outputs.

AC Test Circuit

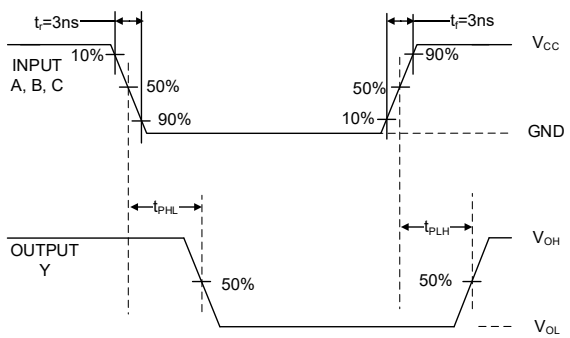

Figure3. Switching Waveform

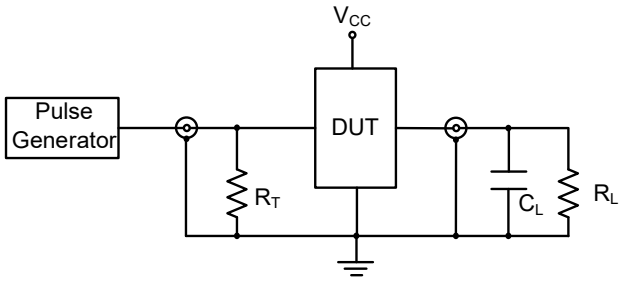

Figure4. Test Circuit

Package Dimension

SC70-6 (1.3mm × 2.1mm)

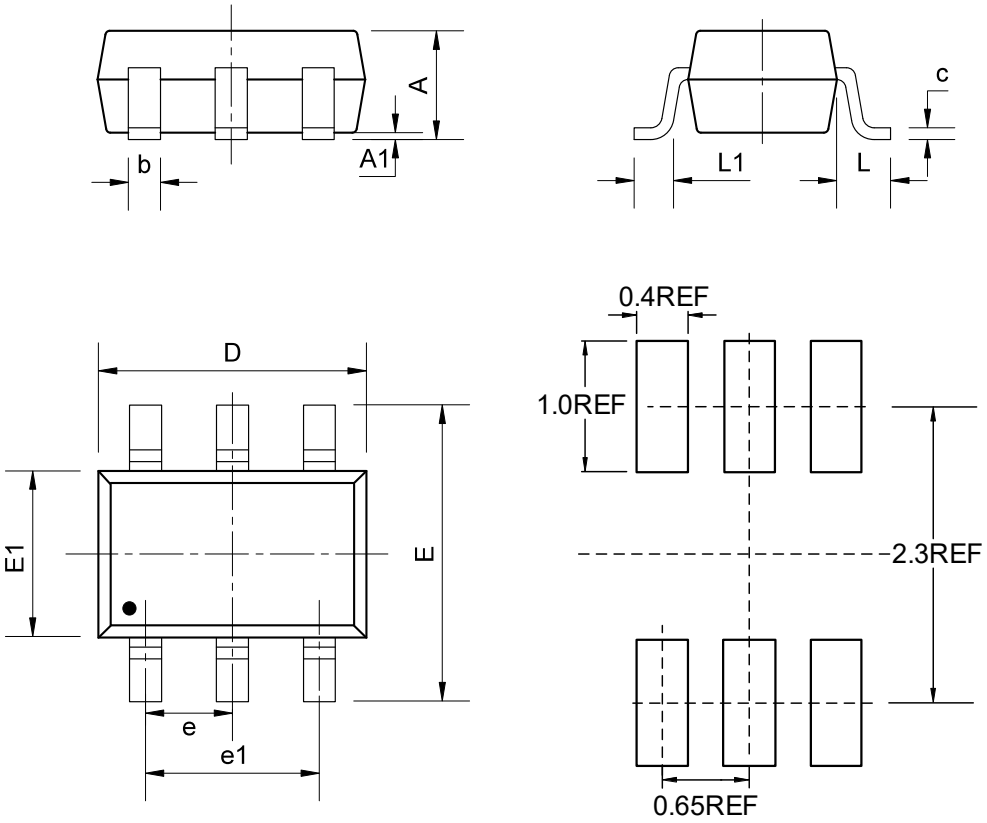

COMMON DIMENSIONS

(Unit: mm)

SYMBOL	MIN	NOM	MAX
A	-	-	1.10
A1	0.00	-	0.15
b	0.15	-	0.35
c	0.08	-	0.20
D	2.00	2.10	2.30
e	0.65BSC		
e1	1.30BSC		
E	2.15	2.30	2.50
E1	1.15	1.30	1.45
L	0.50REF		
L1	0.33REF		

SOT23-6 (1.6mm × 2.9mm)

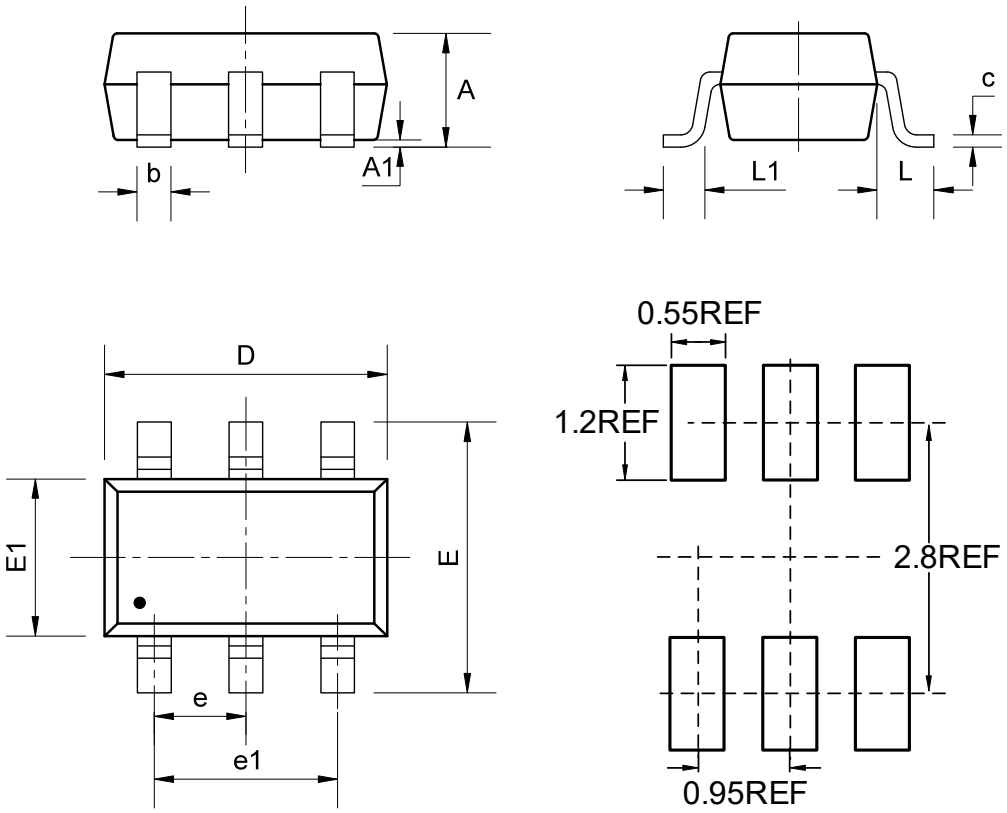

COMMON DIMENSIONS

(Unit: mm)

SYMBOL	MIN	NOM	MAX
A	-	-	1.45
A1	0.00	-	0.15
b	0.28	0.35	0.50
c	0.08	0.15	0.22
D	2.75	2.9	3.05
e	0.90	0.95	1.00
e1	1.80	1.90	2.00
E	2.60	2.80	3.00
E1	1.45	1.6	1.75
L	0.60REF		
L1	0.30	0.45	0.60

DFN6 (1.0mm × 1.5mm)

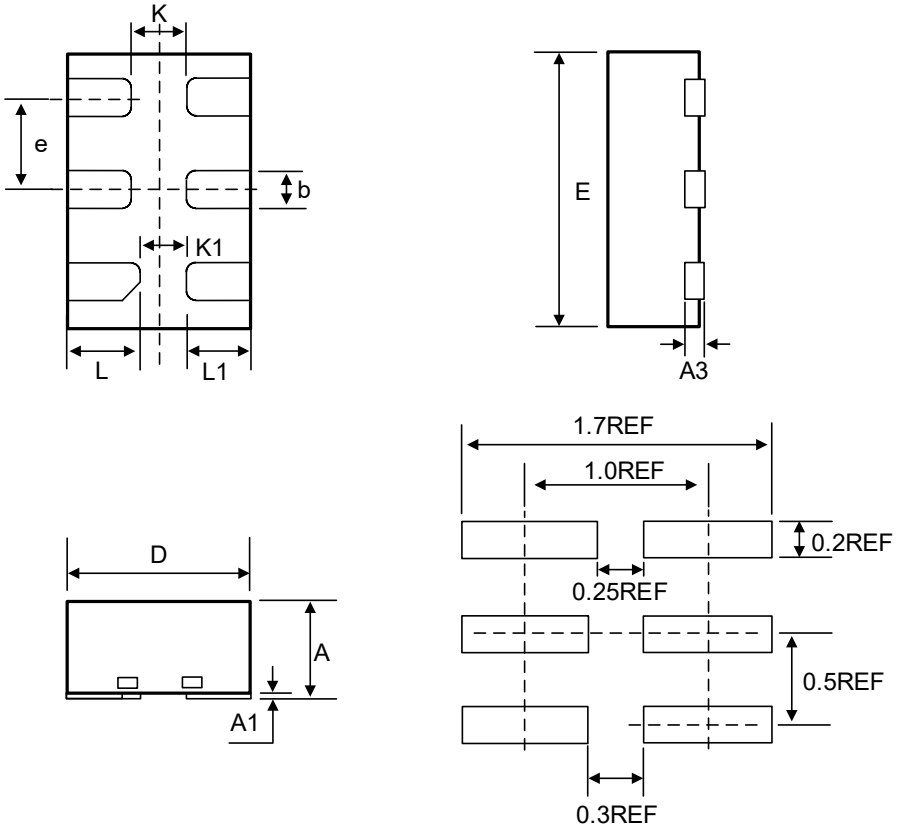

COMMON DIMENSIONS

(Unit: mm)

SYMBOL	MIN	NOM	MAX
A	0.50	--	0.60
A1	0.00	0.02	0.05
A3	0.10REF		
b	0.15	0.20	0.25
D	0.90	1.00	1.10
E	1.40	1.50	1.60
e	0.50BSC		
K	0.30REF		
K1	0.25REF		
L	0.35	0.40	0.45
L1	0.30	0.35	0.40

Tape Information

SC70-6 (1.3mm × 2.1mm)

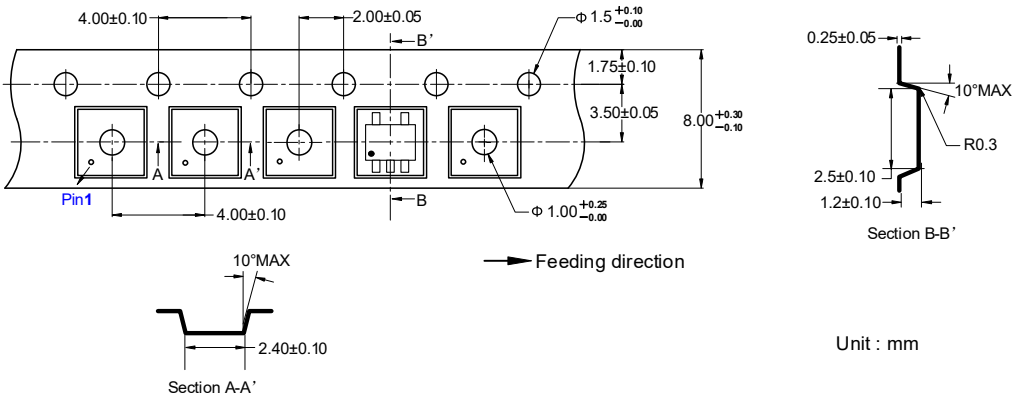

SOT23-6 (1.6mm × 2.9mm)

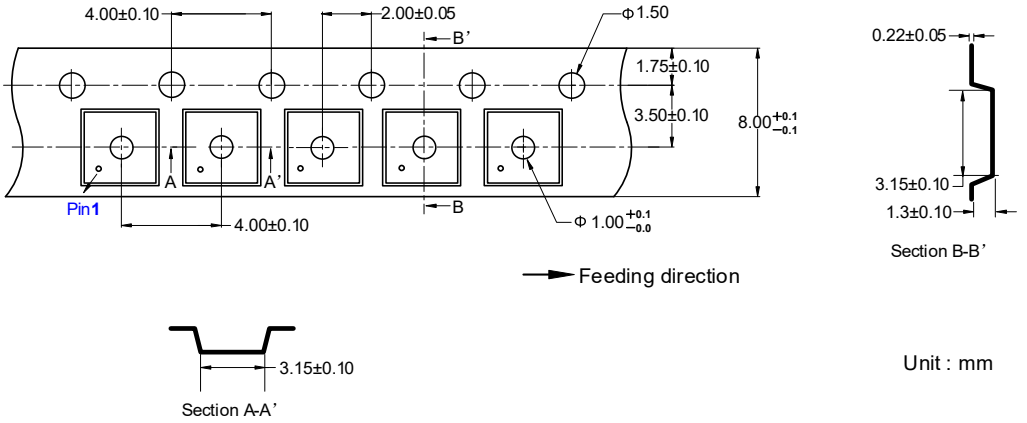

DFN6 (1.0mm × 1.5mm)

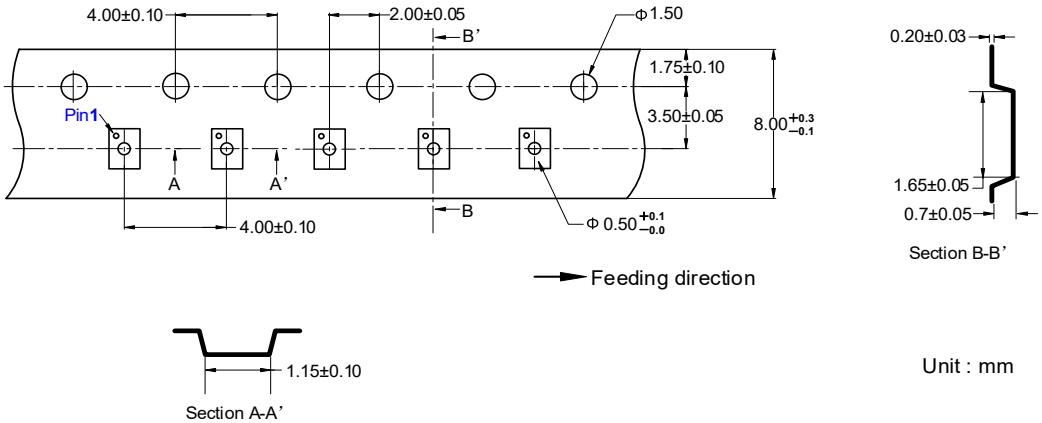

Marking Information

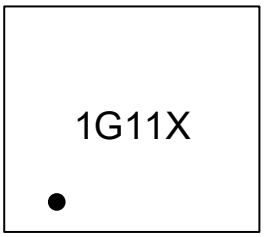

ET74LVC1G11
1G11 = Part Number
X = Tracking Number

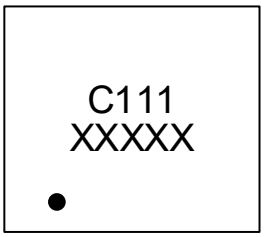

ET74LVC1G11T
C111 = Part Number
XXXXX = Tracking Number

Revision History and Checking Table

Version	Date	Revision Item	Modifier	Function & Spec Checking	Package & Tape Checking
0.0	2025-10-23	Preliminary Version	Wang anran	Yang xiaoxu	Liu jiaying
1.0	2025-12-25	Official Version	Xu tao	Yang xiaoxu	Liu jiaying