Single Inverter with Schmitt Trigger

General Description

The ET74AHC1G14 is a single inverter with Schmitt-trigger input. Inputs include clamp diodes. This enables the use of current limiting resistors to interface inputs to voltages in excess of V_{CC}. Schmitt trigger inputs transform slowly changing input signals into sharply defined jitter-free output signals.

Features

- ±8mA Balanced Output Sink and Source Capability
- Over-Voltage Tolerant Inputs Accept Voltages to 5.5V
- Designed for 2V to 5.5V V_{CC} Operation
- These Devices are Pb-Free, Halogen Free/BFR Free and RoHS Compliant
- ESD Protection Complies with JESD22 Standard
  -- HBM: ±4000V Pass (JEDEC JS-001)
  -- CDM: ±1000V Pass (JEDEC JS-002)
- Latch-up Performance Exceeds ±100mA per JEDEC JESD78F
- Part No. and Package Information

Part No.	Package	Packing Option	MSL
ET74AHC1G14	SC70-5 (1.3mm × 2.1mm)	Tape and Reel, 3K/Reel	1
ET74AHC1G14T	SOT23-5 (1.6mm × 2.9mm)	Tape and Reel, 3K/Reel	3
ET74AHC1G14Y	DFN6 (1.0mm × 1.5mm)	Tape and Reel, 3K/Reel	1

Pin Configuration

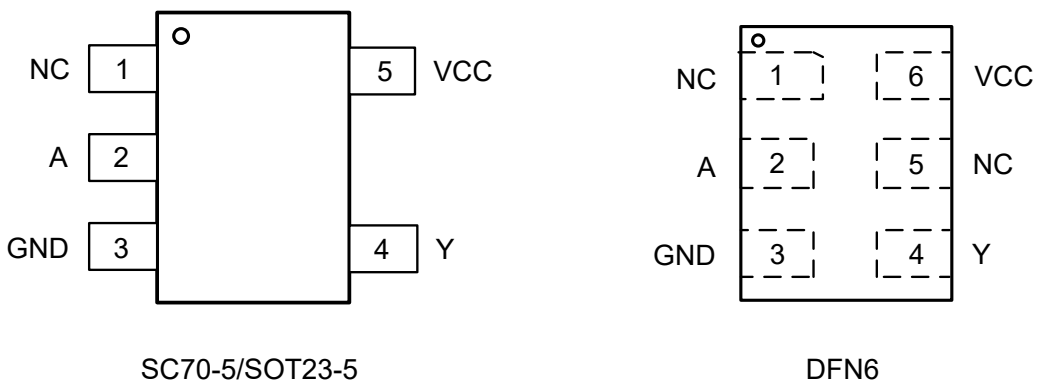

Figure1. Pin Configuration

Pin Function

SC70-5/ SOT23-5

Pin No.	Pin Name	Function
1	NC	No Connect
2	A	Input
3	GND	Ground
4	Y	Output
5	VCC	Supply Voltage

DFN6

Pin No.	Pin Name	Function
1	NC	No Connect
2	A	Input
3	GND	Ground
4	Y	Output
5	NC	No Connect
6	VCC	Supply Voltage

Block Diagram

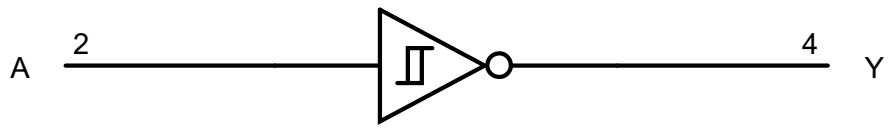

Figure2. Logic Symbol

Function Table

Input A	Output Y
L	H
H	L

Absolute Maximum Ratings

Symbol	Parameter		Value	Unit
V_{CC}	DC Supply Voltage (VCC Pin)		-0.5 to 7.0	V
V_I	DC Input Voltage[1]		$-0.5 \le V_I \le 7.0$	V
V_O	DC Output Voltage Output in Higher or Low State		-0.5 to V_{CC} + 0.5	V
I_{IK}	DC Input Diode Current, V_I < GND		-50	mA
I_{OK}	DC Output Diode Current, V_O < GND, V_O > V_{CC}		±50	mA
I_O	DC Output Sink Current		±50	mA
I_{CC}	DC Supply Current Per Supply Pin		100	mA
I_{GND}	DC Ground Current Per Supply Pin		-100	mA
T_{STG}	Storage Temperature Range		-65 to 150	°C
T_L	Lead Temperature, Soldering 10 Seconds		260	°C
T_J	Max Junction Temperature		150	°C
V_{ESD}	ESD Classification	Human Body Model [2]	±4000	V
		Charged Device Model [3]	±1000	
I_{LU}	Max Latch Up Current Above V_{CC} and GND at 125°C [4]		±100	mA

Stresses exceeding Maximum Ratings may damage the device. Maximum Ratings are stress ratings only. Functional operation above the Recommended Operating Conditions is not implied. Extended exposure to stresses above the Recommended Operating Conditions may affect device reliability.

Note1： I_O absolute maximum rating must be observed.

Note2： HBM tested per JEDEC JS-001;

Note3： CDM tested per JEDEC JS-002;

Note4： Latch Up Current Maximum Rating tested per JEDEC JESD78F.

Thermal Characteristics

Symbol	Package	Ratings	Value	Unit
$R_{\theta JA}$	SC70-5	Thermal Characteristics, Thermal Resistance, Junction-to-Air	300	°C/W
	SOT23-5		250	
	DFN6		440	
P_D	SC70-5	Power Dissipation in Still Air at 85°C	215	mW
	SOT23-5		260	
	DFN6		150	

Recommended Operating Conditions

Symbol	Parameter	Min	Max	Unit
V_{CC}	DC Supply Voltage Operating	2	5.5	V
V_I	DC Input Voltage	0	V_{CC}	V
V_O	DC Output Voltage (High or Low State)	0	V_{CC}	V
T_A	Operating Temperature Range	-40	125	°C

Electrical Characteristics

DC Electrical Characteristics

Symbol	Parameter	Condition	V_{CC}(V)	T_A = 25°C			-40°C ≤ T_A ≤ 125°C		Unit
				Min	Typ	Max	Min	Max	
V_{IH}	High-Level Input Voltage		2.0	1.5			1.5		V
			3.0	2.1			2.1		
			5.5	3.85			3.85		
V_{IL}	Low-Level Input Voltage		2.0			0.5		0.5	V
			3.0			0.9		0.9	
			5.5			1.65		1.65	
V_{OH}	High-Level Output Voltage	I_{OH} = -50uA	2~5.5	V_{CC} - 0.1	V_{CC}		V_{CC} - 0.1		V
		I_{OH} = -4mA	3	2.58			2.4		
		I_{OH} = -8mA	4.5	3.54			3.7		
V_{OL}	Low-Level Output Voltage	I_{OL} = 50uA	2~5.5			0.1		0.1	V
		I_{OL} = 4mA	3			0.36		0.55	
		I_{OL} = 8mA	4.5			0.36		0.55	
I_{IN}	Input Leakage Current	V_I = 5.5V or GND	0~5.5			0.1		2.0	uA
I_{OFF}	Power Off Leakage Current	V_I = 5.5V or V_O = 5.5V	0			1		10	μA
I_{CC}	Quiescent Supply Current	V_I = 5.5V or GND	5.5			1		40	uA

Product parametric performance is indicated in the Electrical Characteristics for the listed test conditions, unless otherwise noted. Product performance may not be indicated by the Electrical Characteristics if operated under different conditions.

AC Electrical Characteristics

$t_r = t_f = 3ns$

Symbol	Parameter	Condition	V_{CC}(V)	T_A = 25°C			-40°C ≤ T_A ≤ 125°C		Unit
				Min	Typ	Max	Min	Max	
t_{PLH} t_{PHL}	Propagation Delay (Figure3 and 4)	C_L = 15pF	3~3.6		3.3	6.8	1	9.3	ns
		C_L = 50pF	3~3.6		5.3	11.8	1	14.8	
		C_L = 15pF	4.5~5.5		2.5	4.5	1	6	
		C_L = 50pF	4.5~5.5		4	6.5	1	8.5	

Capacitance Characteristics

Symbol	Parameter	Condition	Typ	Unit
C_{IN}	Input Capacitance	V_{CC} = 5.5V, V_I = 0V or V_{CC}	5	pF
C_{PD}	Power Dissipation Capacitance [5]	10MHz, V_{CC} = 3.3V, V_I = 0V or V_{CC}	9	pF
		10MHz, V_{CC} = 5.5V, V_I = 0V or V_{CC}	11	

Note5: C_{PD} is used to determine the dynamic power dissipation (P_D in μW).

$P_D = C_{PD} \times V_{CC}{}^2 \times f_i \times N + \Sigma(C_L \times V_{CC}{}^2 \times f_o)$ where:

f_i = input frequency in MHz;

f_o = output frequency in MHz;

C_L = output load capacitance in pF;

V_{CC} = supply voltage in V;

N = number of inputs switching;

$\Sigma(C_L \times V_{CC}{}^2 \times f_o)$ = sum of outputs.

AC Test Circuit

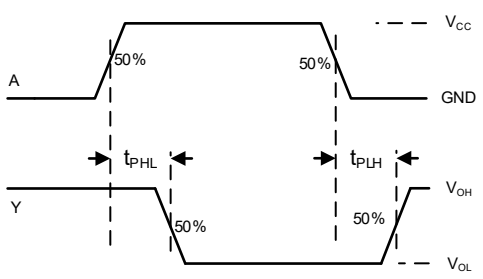

Figure3. Switching Waveform

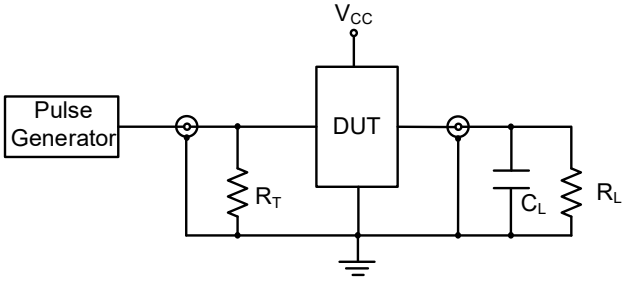

Figure4. Test Circuit

Package Dimension

SC70-5 (1.3mm × 2.1mm)

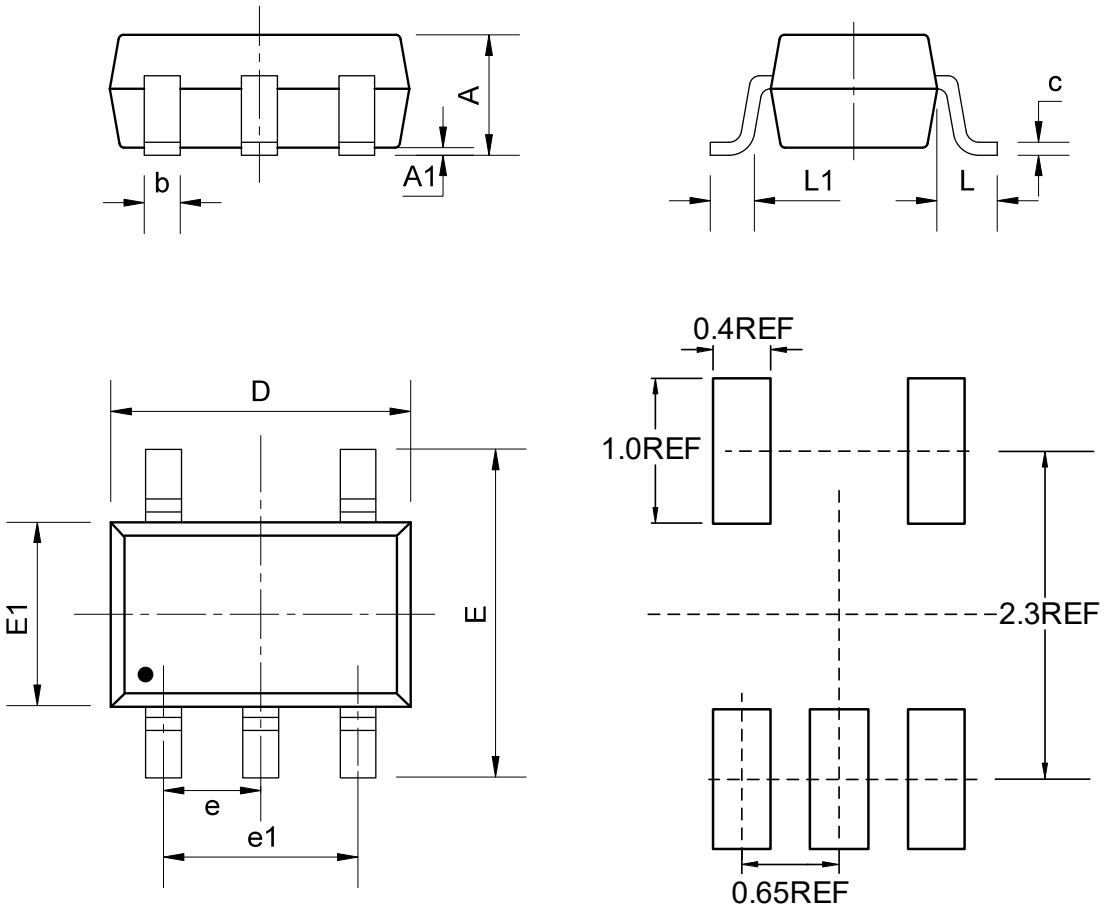

COMMON DIMENSIONS

(Unit: mm)

SYMBOL	MIN	NOM	MAX
A	-	-	1.10
A1	0.00	-	0.15
b	0.15	-	0.35
c	0.08	-	0.20
D	2.00	2.10	2.30
e	0.65BSC		
e1	1.30BSC		
E	2.15	2.30	2.50
E1	1.15	1.30	1.45
L	0.50REF		
L1	0.33REF		

SOT23-5 (1.6mm × 2.9mm)

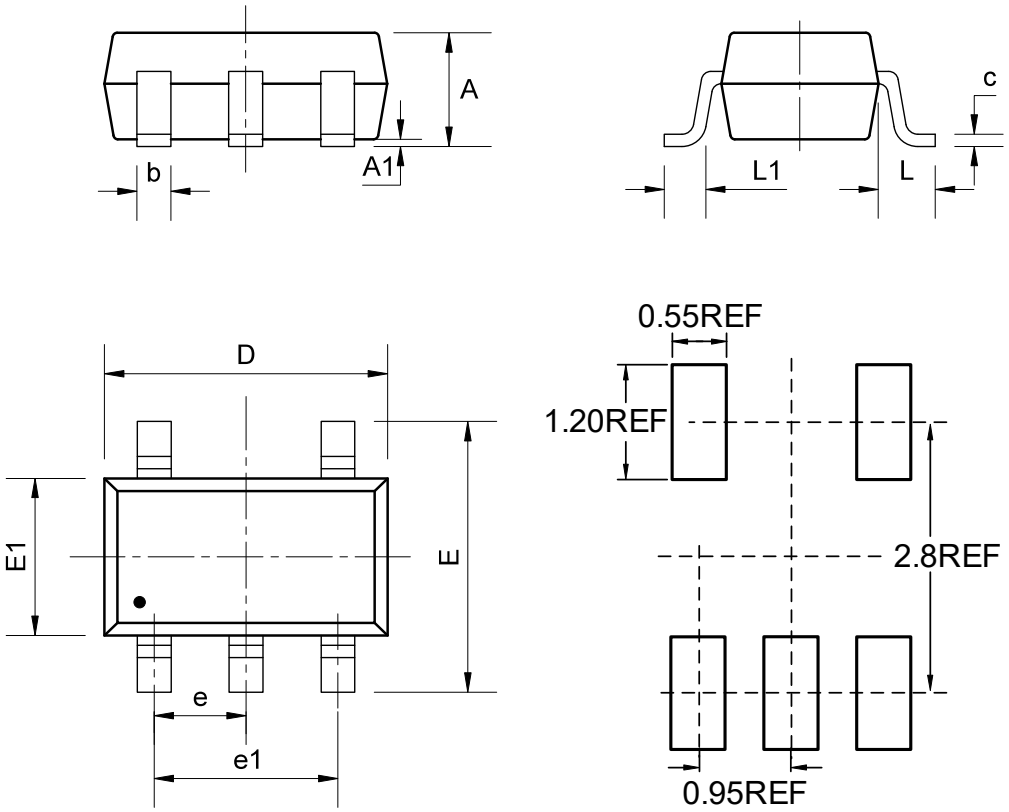

COMMON DIMENSIONS

(Unit: mm)

SYMBOL	MIN	NOM	MAX
A	-	-	1.45
A1	0.00	-	0.15
b	0.28	0.35	0.50
c	0.08	0.15	0.22
D	2.75	2.9	3.05
e	0.90	0.95	1.00
e1	1.80	1.90	2.00
E	2.60	2.80	3.00
E1	1.45	1.6	1.75
L	0.60REF		
L1	0.30	0.45	0.60

DFN6 (1.0mm × 1.5mm)

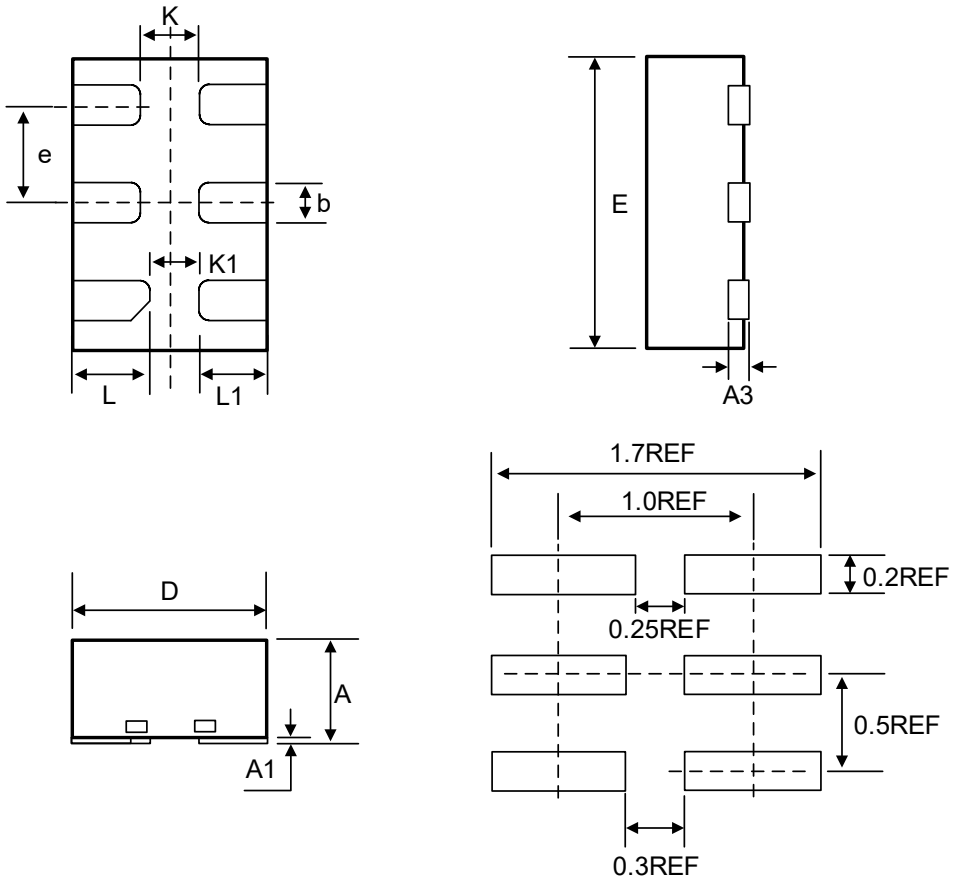

COMMON DIMENSIONS

(Unit: mm)

SYMBOL	MIN	NOM	MAX
A	0.50	--	0.60
A1	0.00	0.02	0.05
A3	0.10REF		
b	0.15	0.20	0.25
D	0.90	1.00	1.10
E	1.40	1.50	1.60
e	0.50BSC		
K	0.30REF		
K1	0.25REF		
L	0.35	0.40	0.45
L1	0.30	0.35	0.40

Tape Information

SC70-5 (1.3mm × 2.1mm)

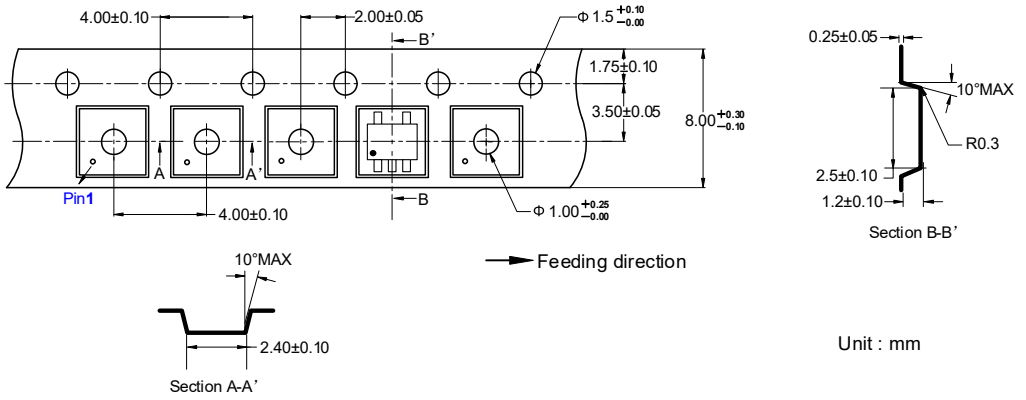

SOT23-5 (1.6mm × 2.9mm)

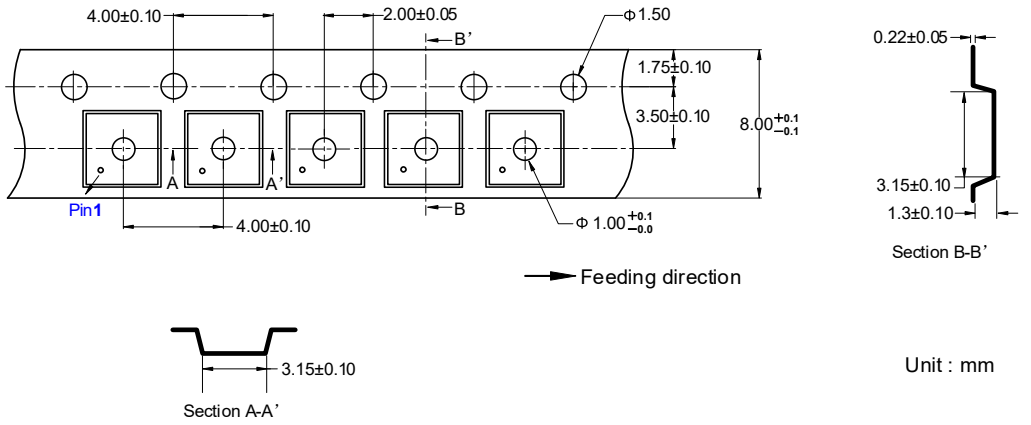

DFN6 (1.0mm × 1.5mm)

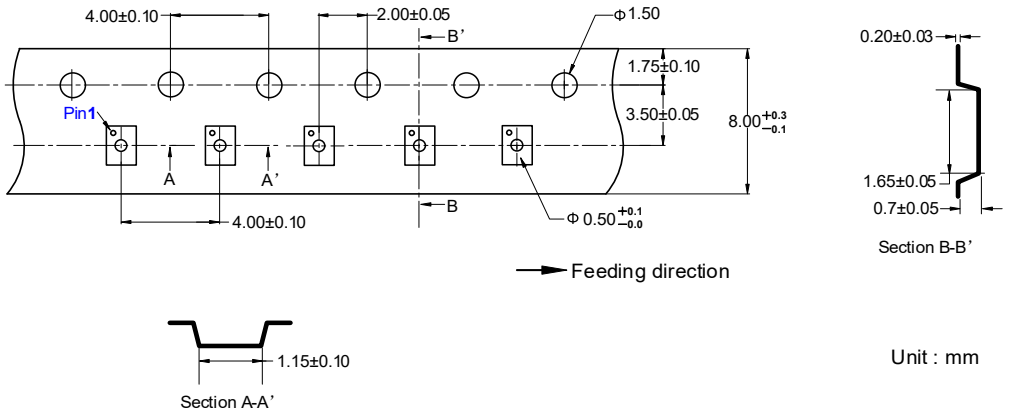

Marking Information

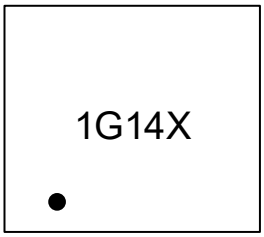

ET74AHC1G14
1G14 = Part Number
X = Tracking Number

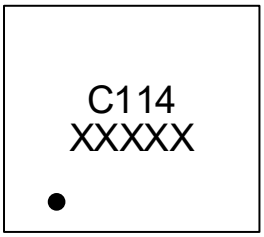

ET74AHC1G14T
C114 = Part Number
XXXXX = Tracking Number

Revision History and Checking Table

Version	Date	Revision Item	Modifier	Function & Spec Checking	Package & Tape Checking
1.0	2025-09-04	Official Version	Wang anran	Yang xiaoxu	Liu jiaying